Board of Building Standards

ELECTRICAL SAFETY INSPECTOR ADVISORY COMMITTEE MEETING AGENDA

DATE: SEPTEMBER 10, 2021
TIME: 10:00 AM
LOCATION: NO MEETING THIS MONTH

Call to Order

Personnel Certification Applications

Continuing Education Applications for Review

ER-1 Grounding and Bonding Electrical Services (Ohio Certificate Renewal)
ESI, BO, MPE, BPE, EPE, BI, FPI, NRIUI, RBO, RPE, RBI, RIUI (4 hours)
Staff Notes:
ESIAC Recommendation:
Committee Recommendation:

ER-2 NEC Round Table (Greater Cincinnati Electrical Association)
ESI, BO, EPE, RBO, RPE (4 hours)
Staff Notes: These monthly round table meetings were approved for 2020, when they focused on the 2017 NEC. They now include the 2020 NEC as well.
ESIAC Recommendation:
Committee Recommendation:

ER-3 Voltage Drop Prevention (Ohio Certificate Renewal)
ESI, BO, MPE, BPE, EPE, BI, FPI, NRIUI, RBO, RPE, RBI, RIUI (4 hours)
Staff Notes: 2020 NEC
ESIAC Recommendation:
Committee Recommendation:

Old Business

New Business

Adjourn

File Attachments for Item:

ER-1 Grounding and Bonding Electrical Services (Ohio Certificate Renewal)

ESI, BO, MPE, BPE, EPE, BI, FPI, NRIUI, RBO, RPE, RBI, RIUI (4 hours)

Staff Notes:

ESIAC Recommendation:

Committee Recommendation:

APPLICATION

FOR

Continuing Education Course Approval

Continuing education programs approved for education credit by the Ohio Board of Building Standards may be used for compliance with certification requirements related to code enforcement, plan review, and inspection responsibilities. The credit is to be used to renew the certifications issued by the Ohio Board of Building Standards pursuant to section 3781.10(E) ORC.

Board of Building Standards
6606 Tussing Road, P.O. Box 4009
Reynoldsburg, Ohio 43068-9009
(614) 644-2613 Fax: (614) 644-3147
dic.bbs@com.state.oh.us
www.com.state.oh.us/dic/dicbbs.htm

COURSE SUBMITTER: OHIO CERTIFICATE RENEWAL (OCR)

Course Submitter: HAROLD PLANT (by MAYDA SANCHEZ SHINGLER)
(Contact Name)

Organization: OHIO CERTIFICATE RENEWAL (aka OCR)
(Organization/Company)

Address: P. O. BOX 211102
(Include Room Number, Suite, etc.)

City: COLUMBUS State: OHIO Zip: 43221-1102

E-Mail: halplant2112@outlook.com / mayda@ohiocertificate.com

Telephone: (614)451-9003 Fax: ALT MOBILE 614.395.9689

Course Sponsor: OHIO CERTIFICATE RENEWAL

COURSE INFORMATION:

Course Title: Grounding & Bonding Electrical Services (4)

New Course Submittal: ■ Update Course: ☐ Prior Approval Number: _____

Purpose and Objective: INSTRUCTOR (J.D. WHITE / ALT - R J SCHUTZ / ALT Sam Cronk) DIRECTED SEMINAR UTILIZING POWER POINT EITHER FROM CLASSROOM PLATFORM FOR ON-SITE PARTICIPANTS OR REMOTE INSTRUCTION VIA INTERNET E-LEARNING PLATFORM RELATING ELECTRICAL SYSTEMS DESIGN, INSTALLATION AND INSPECTION PRACTICES BY DIRECT REFERENCE TO THE LATEST EDITIONS OF THE OHIO BUILDING CODE (OBC) AND NFPA STANDARD 70 - NATIONAL ELECTRICAL CODE (NEC - 2020). Enable participants to better understand the correct methods of Grounding & Bonding of Electrical Services.

Number of Instructional Contact Hours that can be obtained upon completion: 4.0

If Multi-Session, Number of Instructional Contact Hours Per Session: n/a

Program Applicable for the Following Participants:

Building Official ■ Master Plans Examiner ■ Building Inspector ■ Fire Protection Inspector ■ Mechanical Inspector ☐
Building Plans Exam. ✔ Plumbing Inspector ☐
Plumbing Plans Exam. ☐ Non-Res IU Inspector ■
Electrical Plans Exam. ■
Mechanical Plans Exam. ☐
Fire Protect. Plans Exam. ☐

Res Building Official ■ Res Plans Examiner ■ Res Building Inspector ■ Res Mechanical Inspector ☐ Res IU Inspector ■

Electrical Safety Inspectors ☐
Location of ESI Course: OCR Classroom / Interactive Webinar Date(s) of ESI Course(s): 09/17/2021

SUBMITTAL CHECKLIST: **Make Sure** all of the Following Information is **Submitted**:		Check Off
Course Submitter:	Name of contact person and their certification numbers, organization, address, fax, phone	X
	Organization sponsoring or requesting the program (if any)	X
Course Title:	Name of course (related to content)	x
Purpose/Objective:	Describe purpose and how course will improve competency of certification(s) listed	x
Contact Hours:	Indicate instructional time and credit requested in hours (e.g.: 0.5 hr, 1 hr, 3.5 hrs)	x
Participants:	Check off each certification for which credit is requested (for which course relates to certification)	x
Content of Program:	Include collated agenda, time schedule, course outline; list specific sections of code, references, and topics covered	x
Course Materials:	Collated workbooks, handouts, hard copy or electronic versions of program is available	x
Instructor(s) Info.:	Resume of professional/educational qualifications & teaching/training experience/BBS certifications	x
Test Materials:		
Completed Application:		x

NOTE: The Board does NOT grant retroactive approval for courses presented prior to approval date.

Ohio Certificate Renewal
(614) 451-9003
Ohio Certificate Renewal
P.O. P.O. Box 211102
Columbus, Ohio 43221-1102
www.OhioCertificate.com

Grounding & Bonding Electrical Services

Outline Presented by Ohio Certificate Renewal

Course Hours: 4.0 Four 50-minute segments / Interactive Webinar or Classroom

Course Description: This course will instruct learners regarding NEC requirements for Utility Supplied and Separately Derived Service Equipment. Detailed guidance will be given to establishing a connection to Earth, requirements of Electrical System Grounding, and the Establishment of an effective Ground Fault Path. Learners will be instructed regarding the Practical Components required and used to create a safe and reliable electrical service.

Course Objective: Enable the class participant to better understand the correct methods of Grounding & Bonding of Electrical Services.

Outline:

I.	Introduction to Grounding & Bonding (Definitions of Each)	7:30 AM	50 Minutes
II.	Grounding Electrode System		
III.	Electrical System Grounding		50 Minutes
IV.	Understanding the Service Riser		
V.	G&B Sizing Requirements		50 Minutes
VI.	Bonding of Electrical Equipment		
VII.	Equipment Grounding Requirements		50 Minutes
VIII.	Intentional Ground Fault Paths		
IX.	Q & A	11:20 AM	

JD White

6048 Astor Avenue 614-546-7884
Columbus, OH 43232 jd.white2000@gmail.com

Objective:

To provide timely and informative teaching relative to Electrical Theory/Fundamentals, Electrical Practices, and National Electric Code Compliance. Most teaching is geared for licensed contractors, architects, engineers, electrical inspectors, and electrician apprentices. I also provide Electrical Design and Drafting of small to moderate sized projects, using AutoCAD.

Teaching Experience:

06/2007 - Present
Columbus State Community College
Title: Skilled Trades Apprenticeship Supervisor
Supervisor: Doug House, 614-287-2576

06/2007 - Present
Columbus State Community College
Title: Adjunct Faculty Teaching:
Electrical Courses, National Electric Code, Employability, Construction Overview, Construction Estimating, Manual Drafting, and AutoCAD
Supervisor: Doug House, 614-287-2576

09/1999 – Present
Electrician Apprenticeship Instructor
Title: Year 1 – Year 4 Lead Instructor
OCILB Instructor, as needed
IEC Central Ohio 614-473-1050

10/2001 – Present
OCILB Instructor, 1-2 seminars per year
Ohio Contractor Training 614-203-1531

12/2008 – Present
OCILB Instructor, 4 seminars per year
Rebecca Warren Training 614-402-6551

11/2017 – Present
OCILB Instructor, 2-6 seminars per year
HalfMoon Education Services 715-835-5900

06/2020 – Present
OCILB, BBS, 8 seminars per year
Ohio Certificate Renewal 614-451-9003

JD White

6048 Astor Avenue 614-546-7884
Columbus, OH 43232 jd.white2000@gmail.com

Trade & Other Experience:

01/2006 – Present
Voltaire Electric Company, Inc. – Columbus, OH
Electrical System Design and Drafting
Title: Consultant 614-546-7884

10/2005 - 08/2006
MG Abbott Electric Company – Columbus, OH
Title: Commercial Electrician, Estimator, and ITS Coordinator
Supervisor: Joe Abbott-President, 614-837-3614

07/1995 - 08/2005
Just Dandy Electric Systems, Inc. – Columbus, OH
Title: Owner, Electrician, Estimator, Project Designer...

08/1989 - 07/1995
Safeway Electric Company, Inc. – Columbus, OH
Title: Commercial Electrician, Commercial Division Manager
Supervisor: Andy Untch, 614-443-7672

07/1976 - 09/1982
MG Abbott Electric Company – Columbus, OH
Title: Electrician, Field Supervisor
Supervisor: Gene Abbott-Owner

09/1982 - 08/1989
Delphos Wesleyan Church – Delphos, OH
Mansfield Wesleyan Church – Mansfield, OH
Title: Senior Pastor

07/1972 - 06/1974
US Navy – Quonset Point-RI
Title: ADJ (Aviation Machinist Mate Jet)
Supervisor: Various

JD White

6048 Astor Avenue
Columbus, OH 43232

614-546-7884
jd.white2000@gmail.com

Licensure:

Electrical
11/1990
Cities of: Columbus, Elyria, Springfield, Youngstown, Toledo, Dayton, and others
07/1992

Electrical State of Ohio
02/1996
State of Ohio #EL 14058

Fire Alarm Installer
02/2003
State of Ohio #54.25.3708

Education:

06/2005 – 05/2015
Columbus State Community College – Columbus, OH
ATS Electrical System Architecture Designer

09/1982 - 05/1987
Indiana Wesleyan University – Marion, IN
Christian Ministries & Biblical Literature

06/1981 - 05/1982
Columbus Technical Institute – Columbus, OH
General Education Studies

06/1973
GED Central High School, Columbus, OH

07/1972 - 08/1973
Naval Aviation Technical Training Center
Aviation A School Jet Engines – Memphis, TN
Naval Aviation Technical Training Center
Aviation B School Helicopters – Quonset Pt, RI
Rating: Aviation Machinist Mate Jet

References:

Joe Abbott - Previous Employer: 614-837-3614
Barb Tipton – Present Employer: 614-473-1050
Dr. Andy Rezin – Previous Supervisor: 614-551-8378
Doug House – Present Supervisor: 614-287-2576
Other References Available Upon Request

Sam Cronk

Sam Cronk has extensive knowledge and experience with the interpretation and application of the National Electrical Code. Sam has been involved in all aspects of the residential, commercial, and industrial electrical industry since 1985. His previous employment includes work as an electrical foreman, project manager, and estimator. He has held numerous certifications and licenses including electrical journeyman by the State of South Carolina, journeyman wireman with the International Brotherhood of Electrical Workers (I.B.E.W.), and electrical contractor with the State of Ohio. Sam currently holds certifications as an Electrical Safety Inspector and Electrical Plans Examiner.

Sam has instructed a variety of adult education and professional continuing education classes, including with Columbus Public Schools, NECA-IBEW Joint Apprenticeship Training Committee (J.A.T.C.), International Association of Electrical Inspectors (I.A.E.I.), and the International Code Council (I.C.C.).

Robert J. Schutz, P.E.

Robert J. Schutz, P.E. is the retired Chief Building Official of the City of Powell (OH) and is currently a Consulting Engineer serving as the contract Plans Examiner and Inspector for several municipalities in central Ohio. He is a civil engineering graduate of the Ohio Northern University with post-graduate studies at the Ohio State University and the University of Southern California.

Bob is a registered Professional Engineer and Professional Surveyor in the State of Ohio; where is also certified as a Building Official, Plans Examiner, Mechanical Inspector, Plumbing Inspector and Electrical Safety Inspector. Bob previously served as the Chief Engineer with the State of Ohio Health Department where he supervised the Plumbing Inspection program, was the Chairman of the Plumbing Advisory Board and was a member of the Ohio Board of Building Standards. Bob instructs nationally and internationally for the International Code Council (ICC), as well as for OCR on Mechanical, Fuel Gas, Plumbing and Building codes.

Grounding and Bonding Service Equipment Requirements

Ohio Certificate Renewal

"Since 1994"

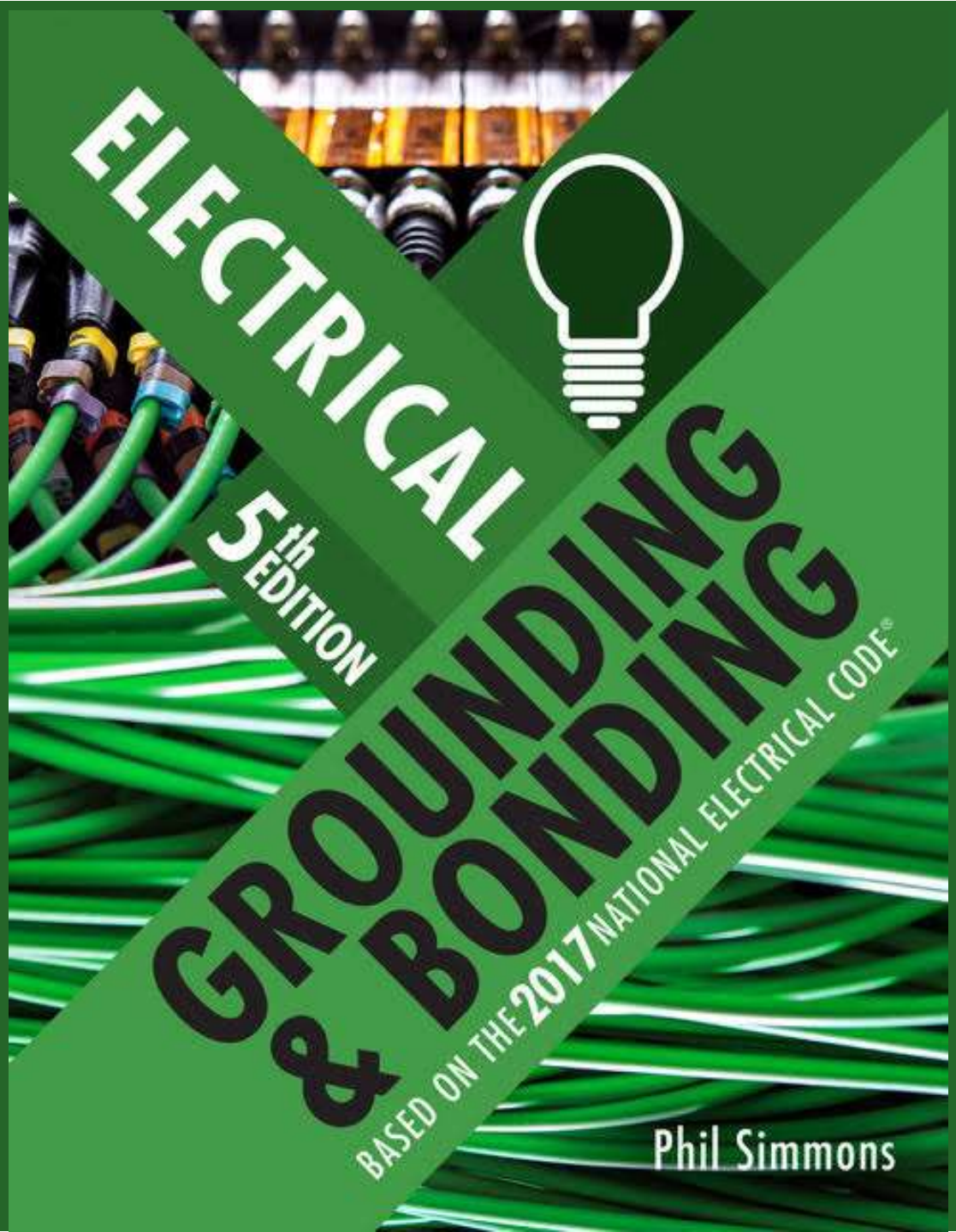
ELECTRICAL
5th EDITION
GROUNDING & BONDING
BASED ON THE 2017 NATIONAL ELECTRICAL CODE®
Phil Simmons

Ideas to Explore

- The importance of using accepted definitions of terms applicable to grounding and bonding
- The importance of providing a low-impedance path of proper capacity to ensure the operation of overcurrent protective devices
- The various components of the grounding and bonding system

Grounding of Electrical Systems

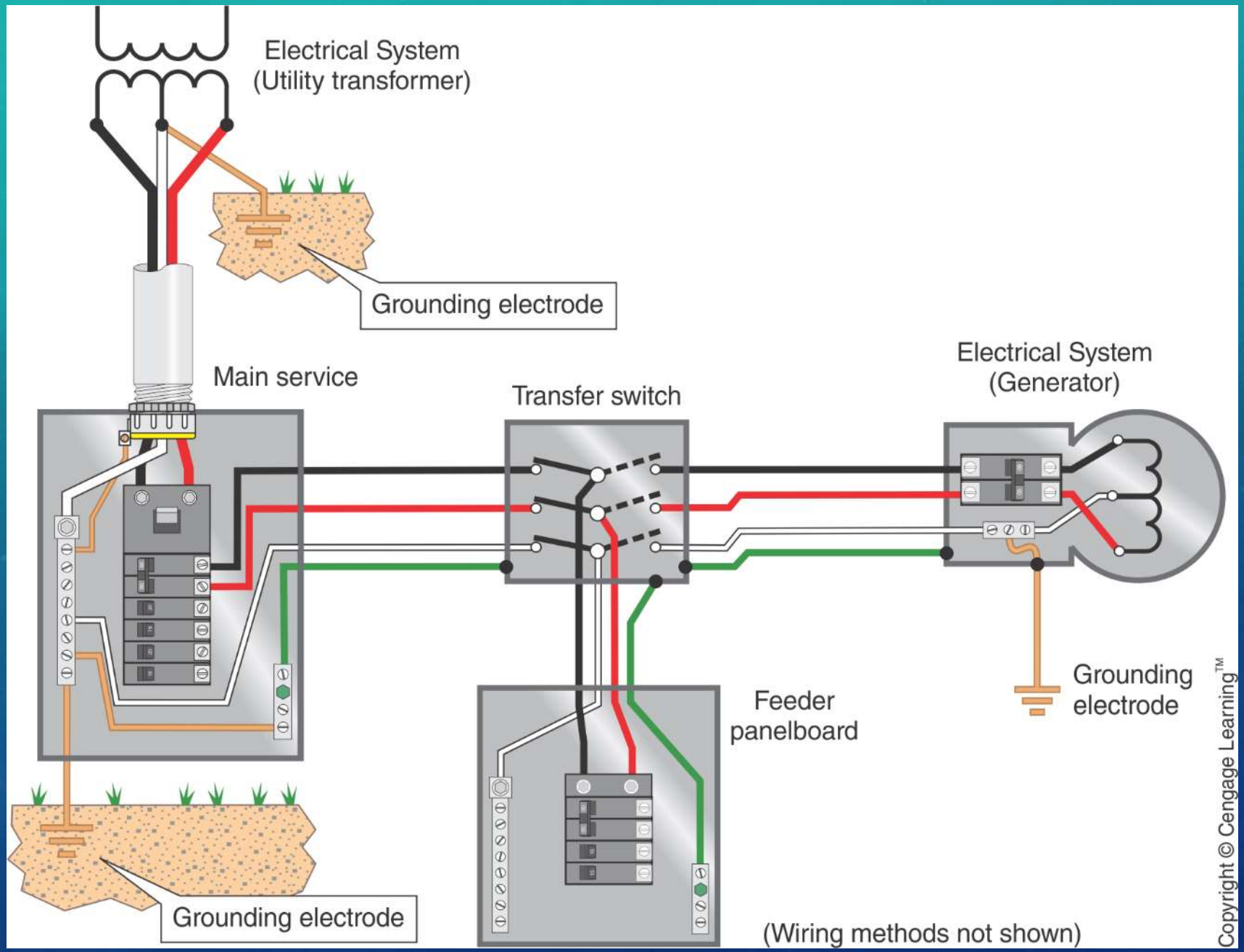

Grounded (Grounding) (*Article 100*)

- "Connected (connecting) to ground or to a conductive body that extends the ground connection"
  - Connection to ground is accomplished by means of a recognized grounding electrode (system).
  - It is vital to provide an effective ground-fault current path defined and described in *Article 250*
- Grounded objects such as metal conduit, cables with metallic sheaths and structural metal may "extend the earth connection"
- Grounding Electrode conductors "extend the earth connection"
  - Structural metal often extends many stories above the point where it makes an earth connection or is connected to a grounding electrode system
  - Metal water pipes are recognized in certain occupancies for connection purposes throughout a building or structure

Grounded by Conductive Body

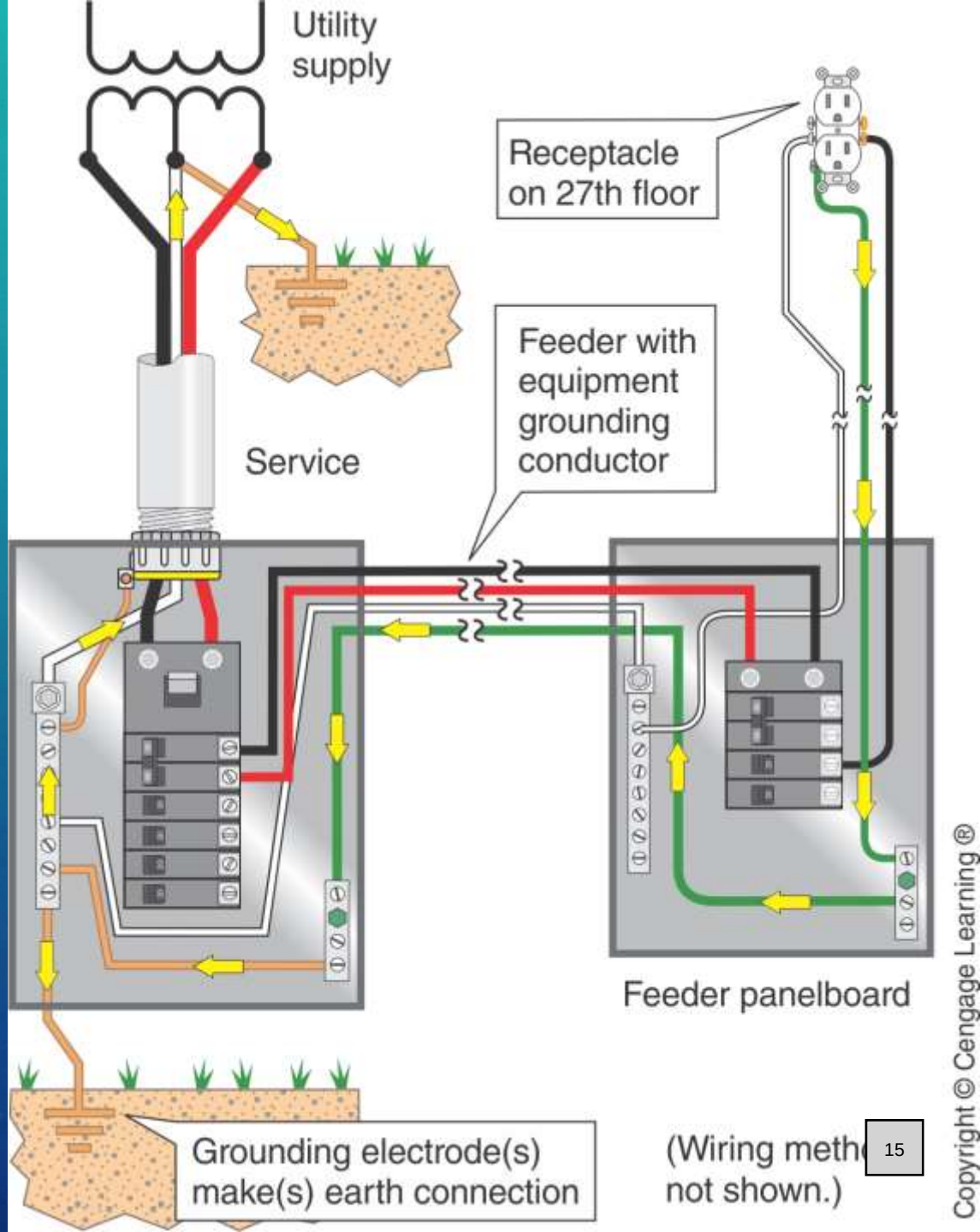

Grounded, Improperly

- Equipment can be “grounded” and not be in compliance with *NEC*®
- Equipment grounding must be in compliance with the “Effective ground fault path rules” in *250.4(A)(5)* and *250.4(B)(4)*

Grounded, improperly

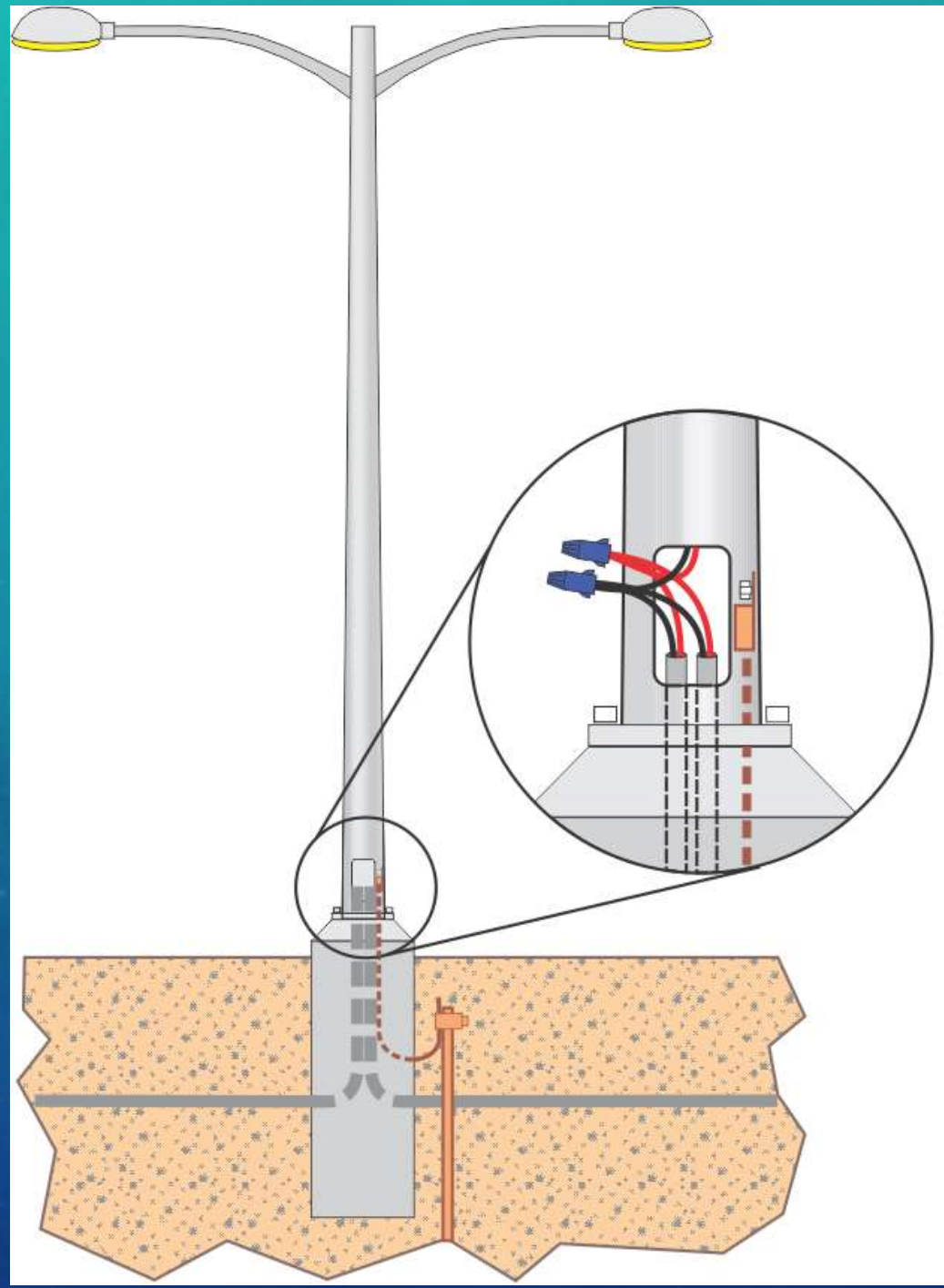

Lighting standard connected to ground rod only.
VIOLATION

250.50 Grounding Electrode System

- All grounding electrodes described in *250.52(A)(1)* through *(A)(7)* that are present at each building or structure served are required to be bonded together to form the grounding electrode system
- If none of these grounding electrodes exist, one or more of the grounding electrodes in *250.52(A)(4)* through *(8)* are required to be installed and used

- *Exception: Concrete-encased electrodes of existing buildings or structures are not required to be part of the grounding electrode system if the steel reinforcing bars or rods are not accessible for use without disturbing the concrete*

Grounding electrode system, *250.50*.

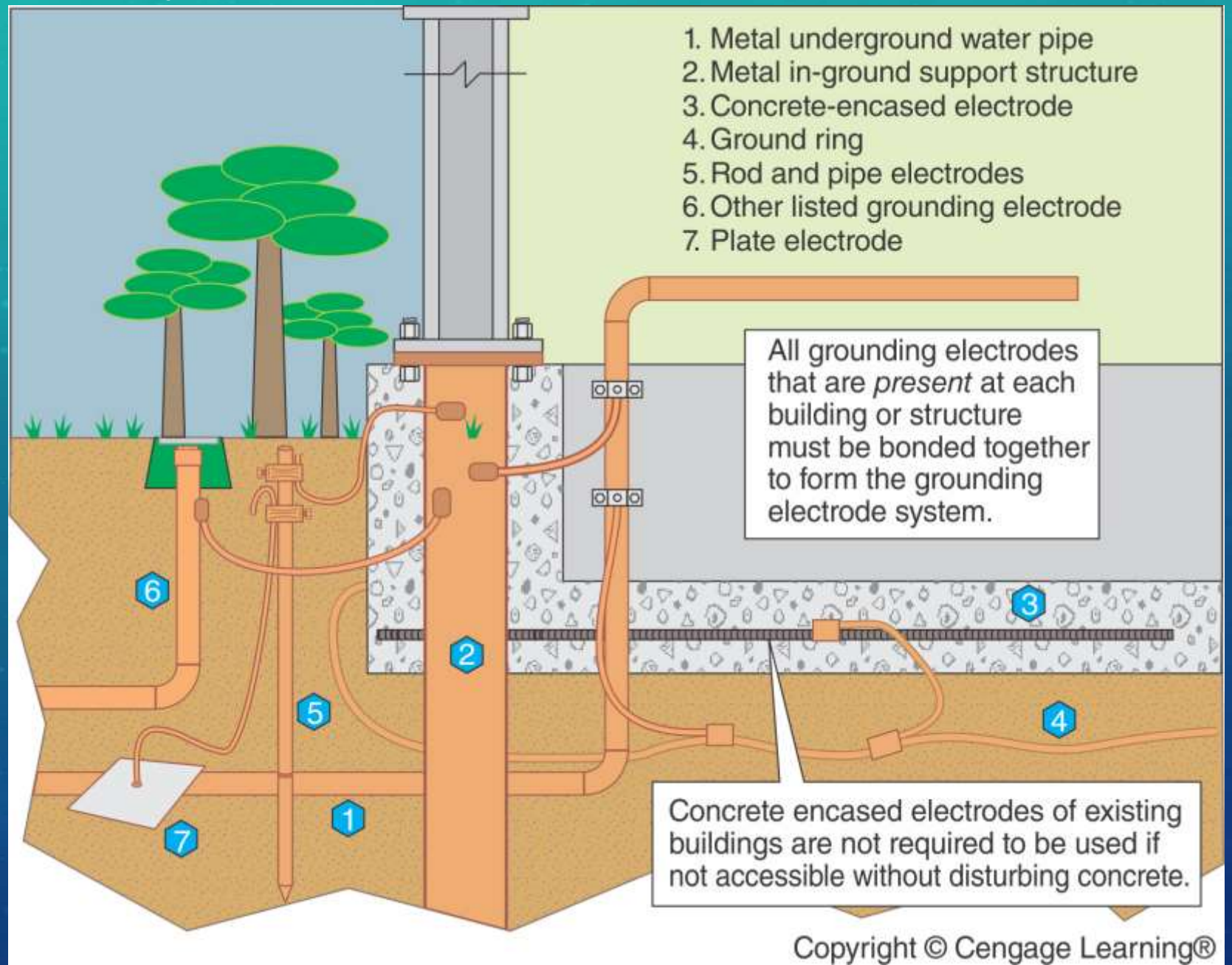

250.52(A) Electrodes Permitted For Grounding

- Use of the grounding electrodes in this section becomes mandatory due to the requirement in *250.50*
- Some electrodes are traditionally installed by other trades
  - Electrodes in *(A)(4)* through *(A)(8)* are often installed by electricians
  - Some installation requirements are contained in the description of the grounding electrodes

250.52(A)(1) Metal Underground Water Pipe

- Required to be used if 10 ft. or more is in direct contact with the earth
- Interior metal water pipe located more than 5 ft. from point of entrance not permitted to be used for connection purposes

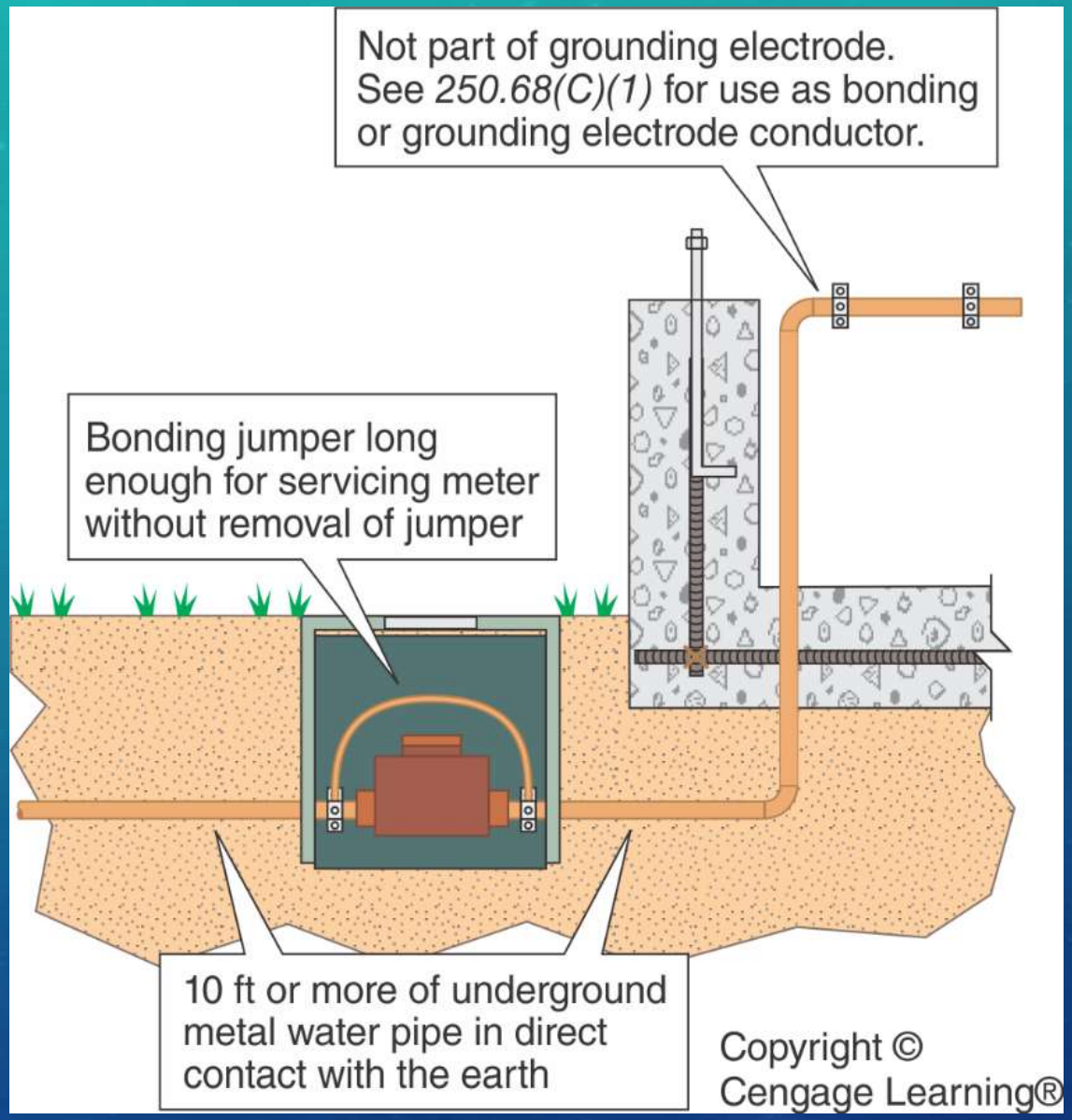

Metal underground water pipe grounding electrode, *250.52(A)(1)*.

Continuity of Water Pipe Grounding Electrode

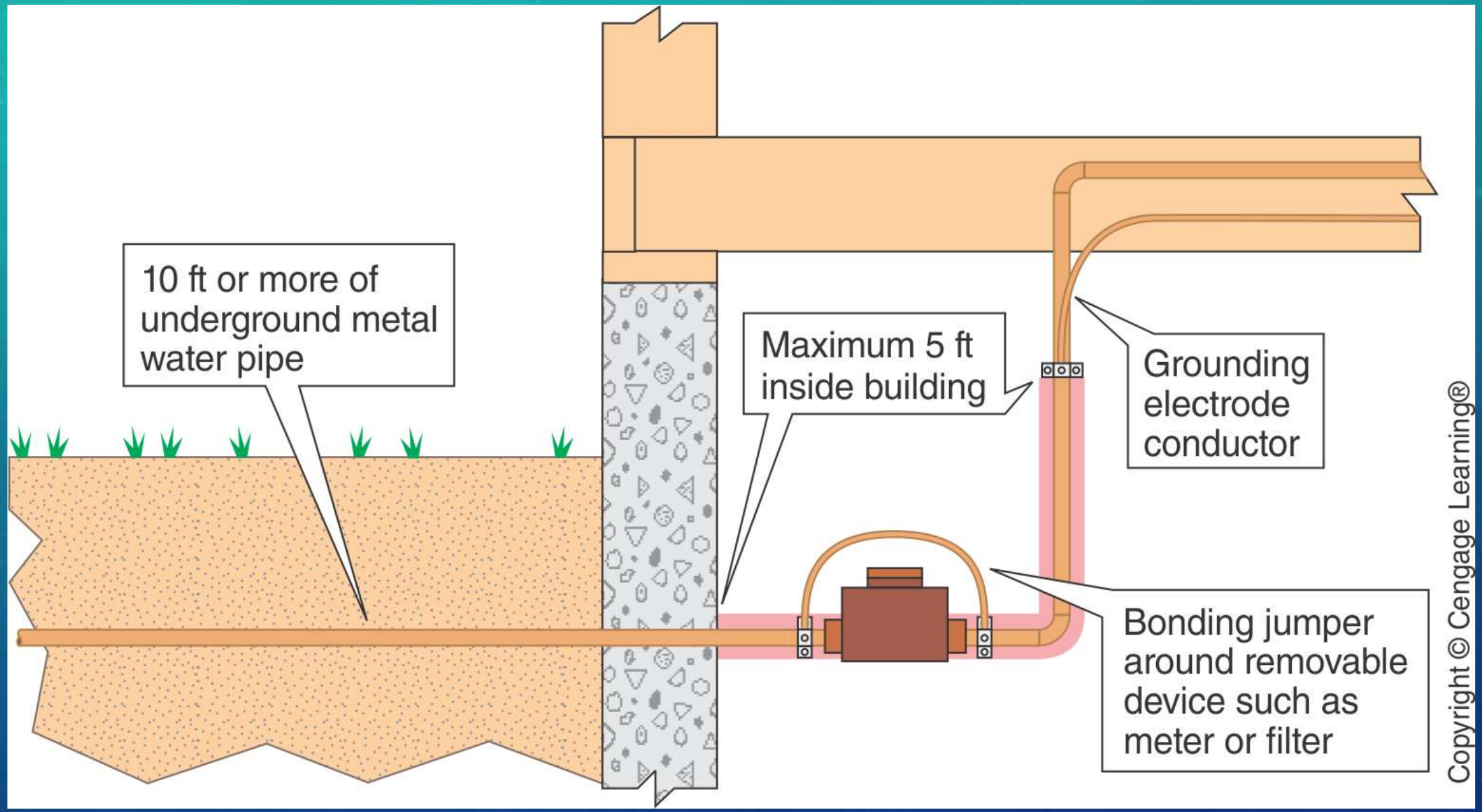

Metal underground water pipe grounding electrode: continuity, *250.53(D)(1)*.

Metal In-ground Support Structure

Metal in-ground support structure grounding electrode, *250.52(A)(2)*.

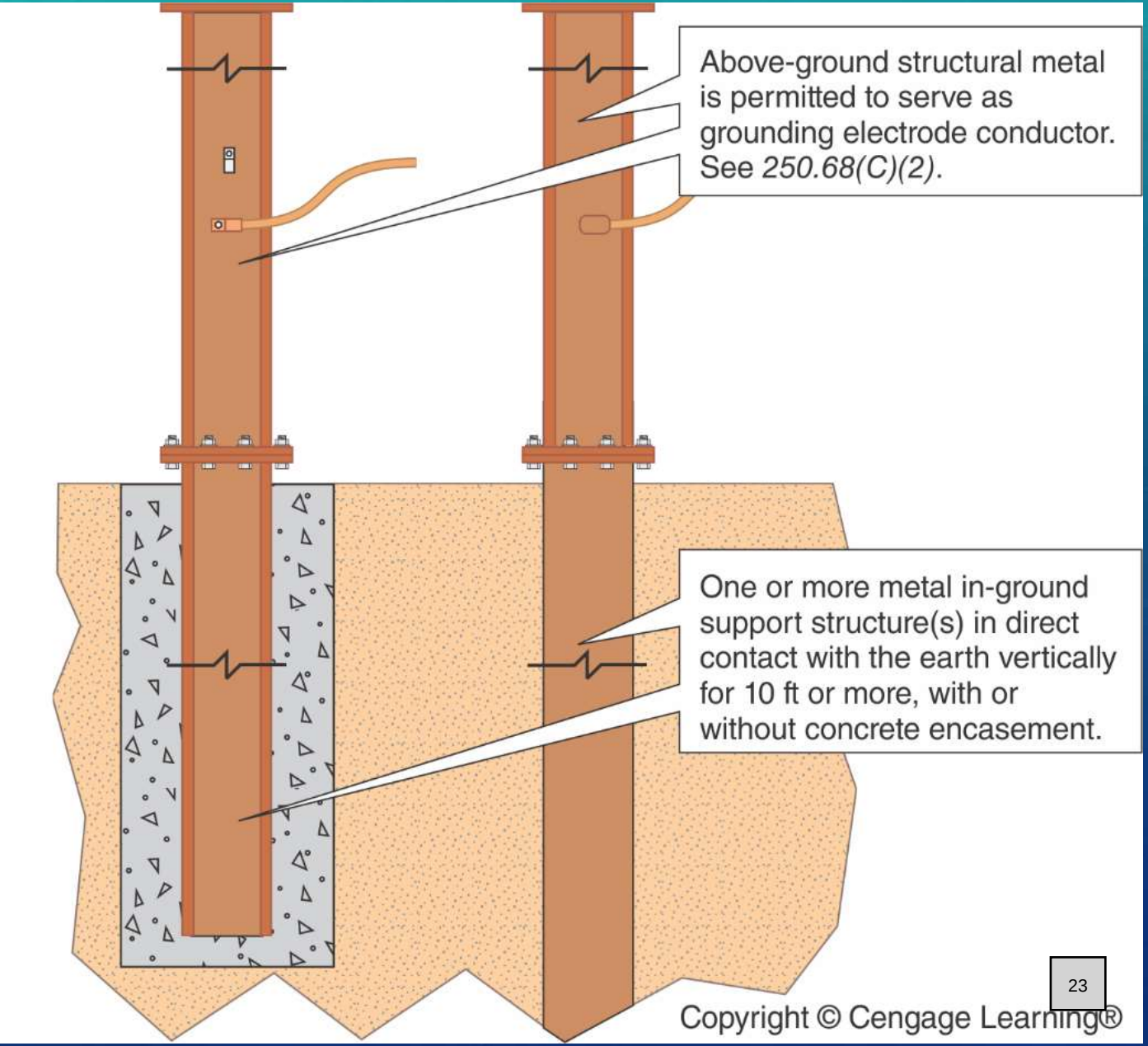

250.52(A)(3) Concrete-Encased Electrode

- Required to be used where present at the building or structure served

- Use of these electrodes pioneered in the early 1940s for the US Army in arid climates

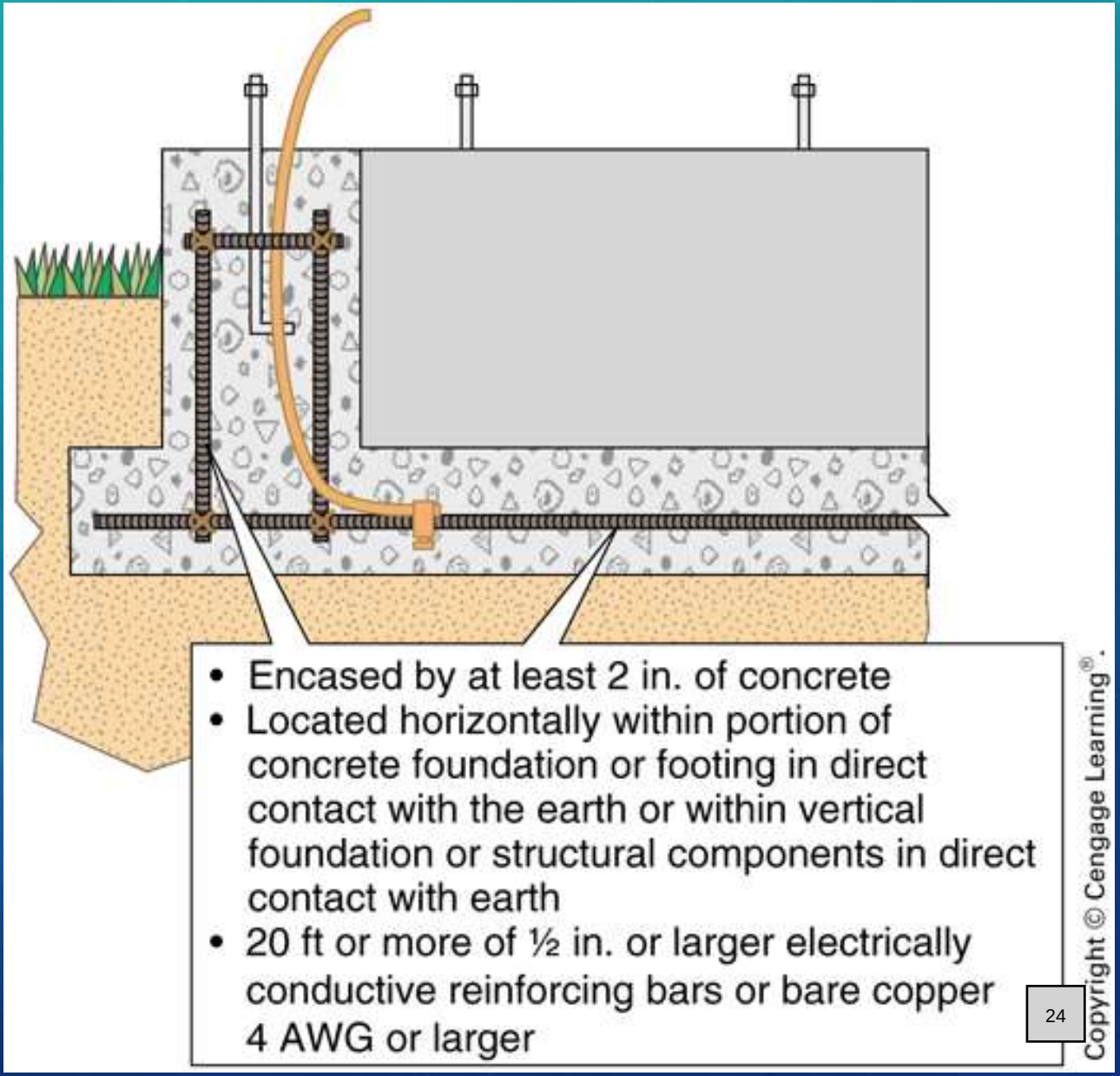

250.52(A)(4) Ground Ring

- To encircle the building or structure
- Be in direct contact with the earth
- Consist of at least 20 ft. of bare copper conductor not smaller than 2 AWG
- Burial depth is not less than 2½ ft. [250.53(F)]

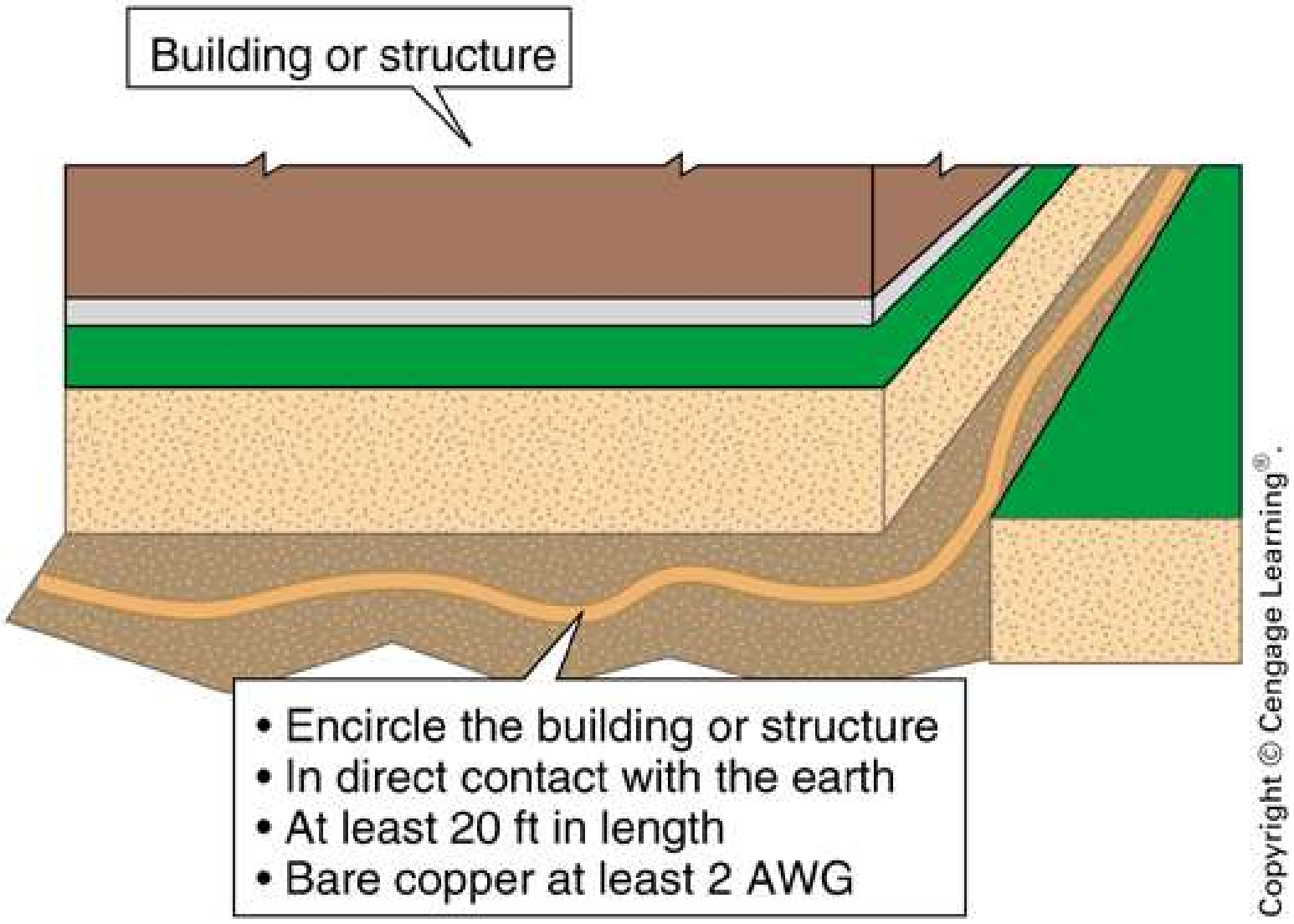

250.52(A)(5) Rod and Pipe Electrodes

- Ideally, installed below permanent moisture level
- Specifications may require thicker or longer electrodes and installation in specific configurations

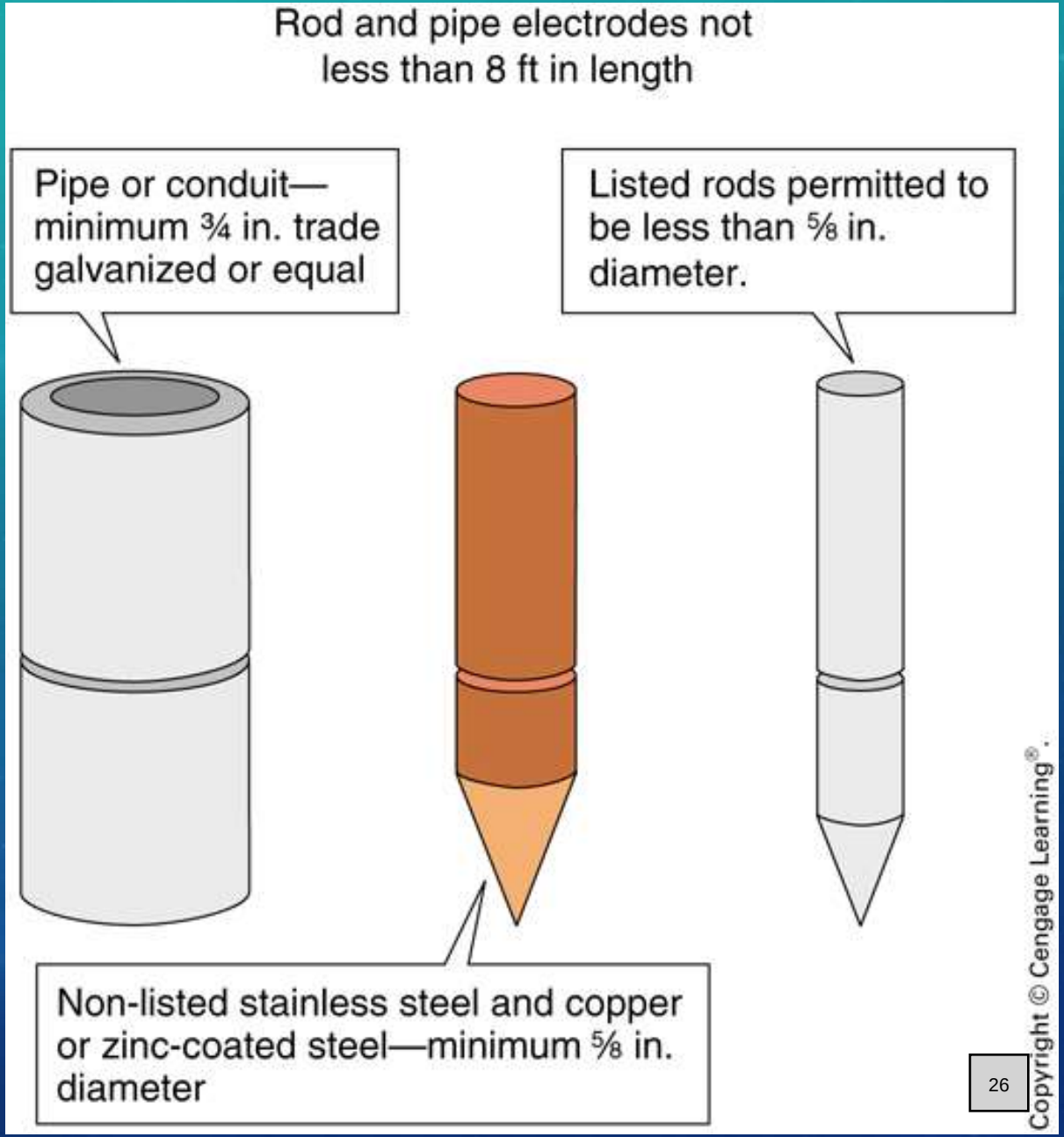

250.52(A)(6) Other Electrodes

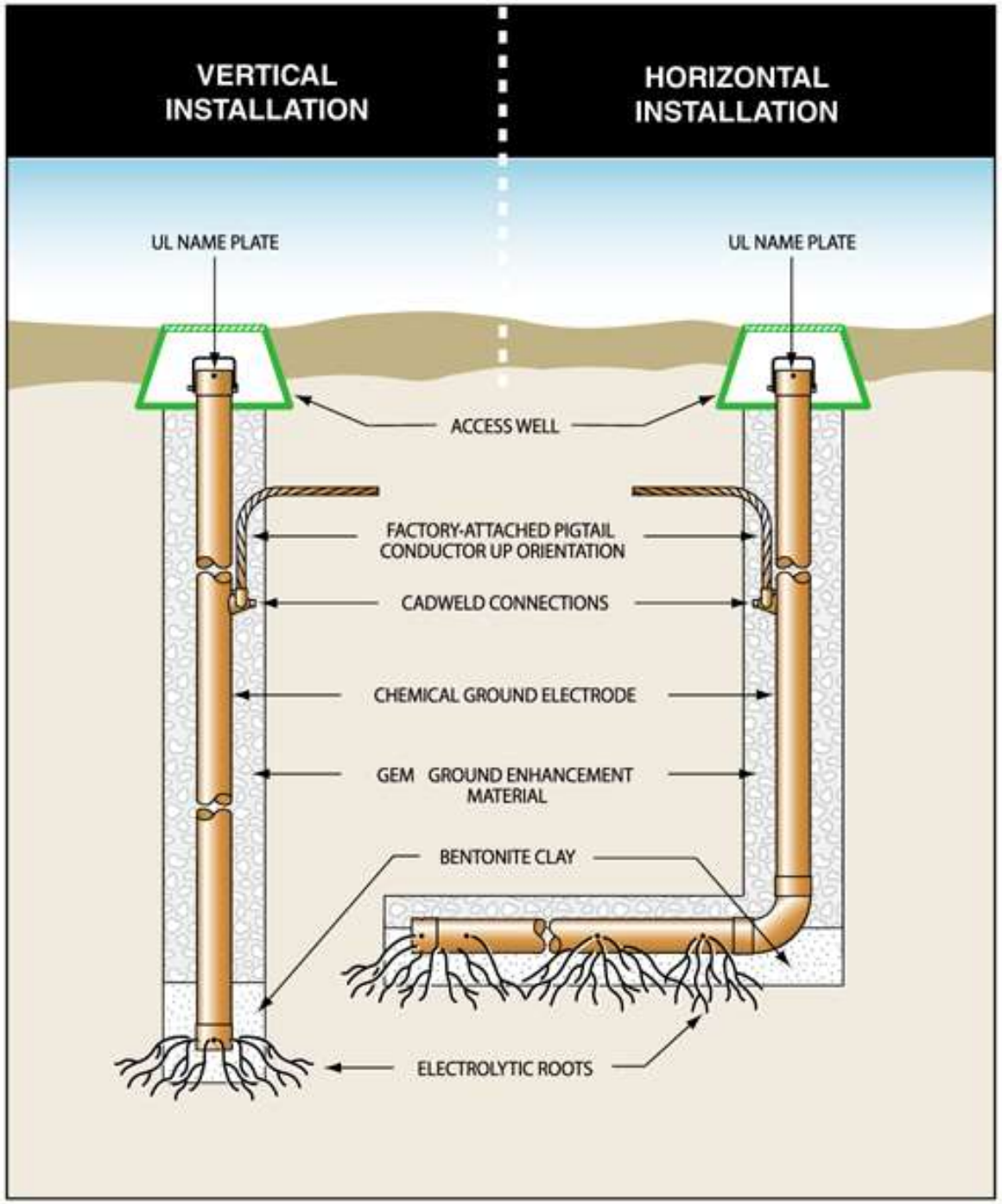

Illustration is reprinted with permission and provided courtesy of ERICO International Corporation. CADWELD is a registered trademark of ERICO International Corporation.

250.52(A)(7) Plate Electrodes

- Each plate electrode required to expose not less than 2 sq. ft. to exterior soil
- 1.5’ by 1.5’
- Some interpret rule as permitting a 12 in. square plate (verify)
- Installation rules are at *250.53(A)*, *(B)*, *(E)*, and *(H)*

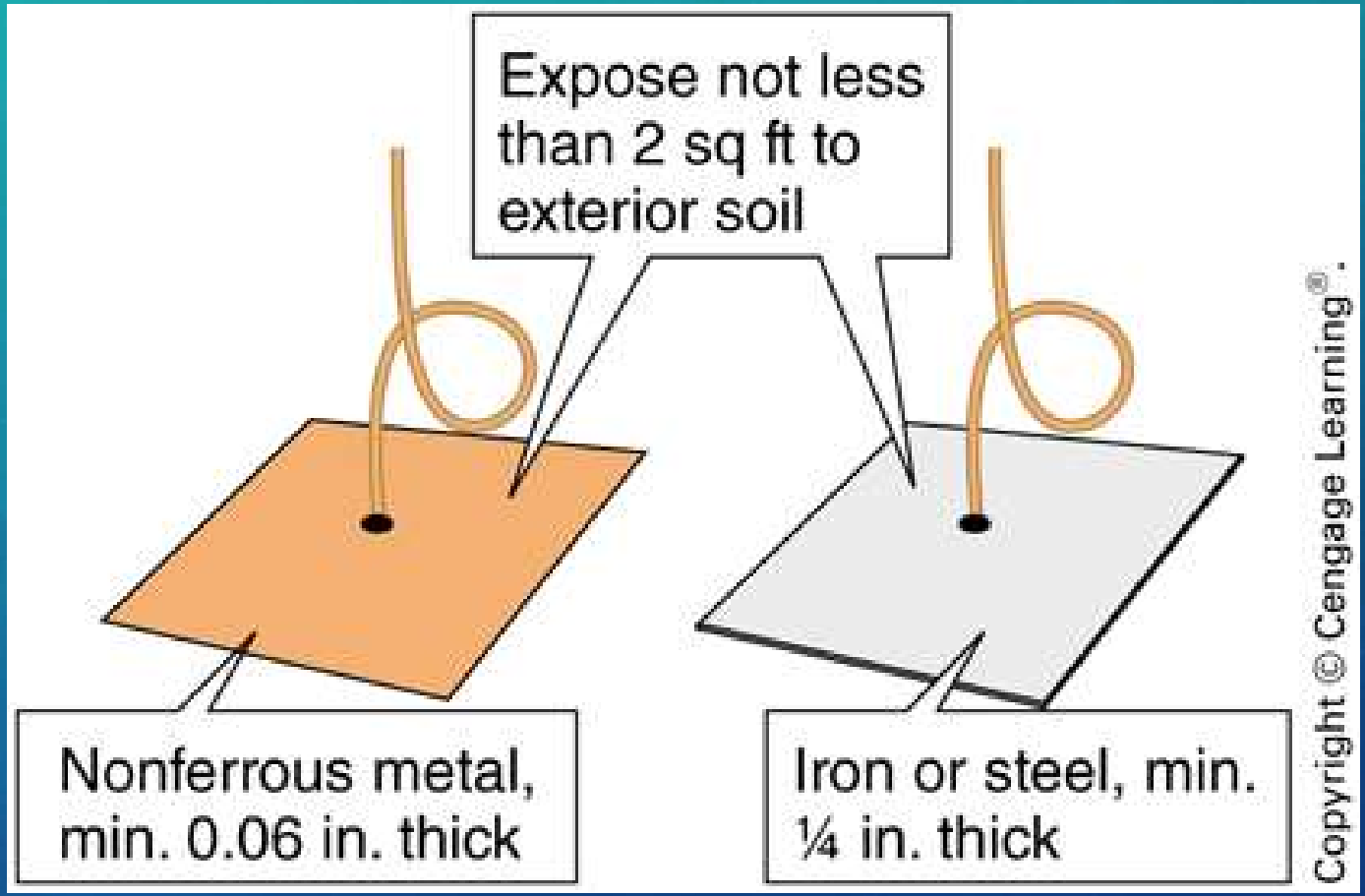

250.53(A)(2) Supplemental Electrode Required

Single rod, pipe, or plate electrode must be supplemented by an electrode of a type specified in *250.52(A)(2)* through *(A)(8)*

- The supplemental electrode is permitted to be bonded to one of the following:
  - Rod, pipe, or plate electrode
  - Grounding electrode conductor
  - Grounded service-entrance conductor
  - Nonflexible grounded service raceway
  - Any grounded service enclosure
  - If the resistance of single rod, pipe or plate is 25 ohms or less, a supplemental grounding electrode is not required

250.53(A)(3) Multiple Rods, Pipes or Plates

- Space not less than 6 ft. apart
- Avoid overlapping “sphere of influence”
- Installation of additional electrodes not required to obtain 25 ohms resistance

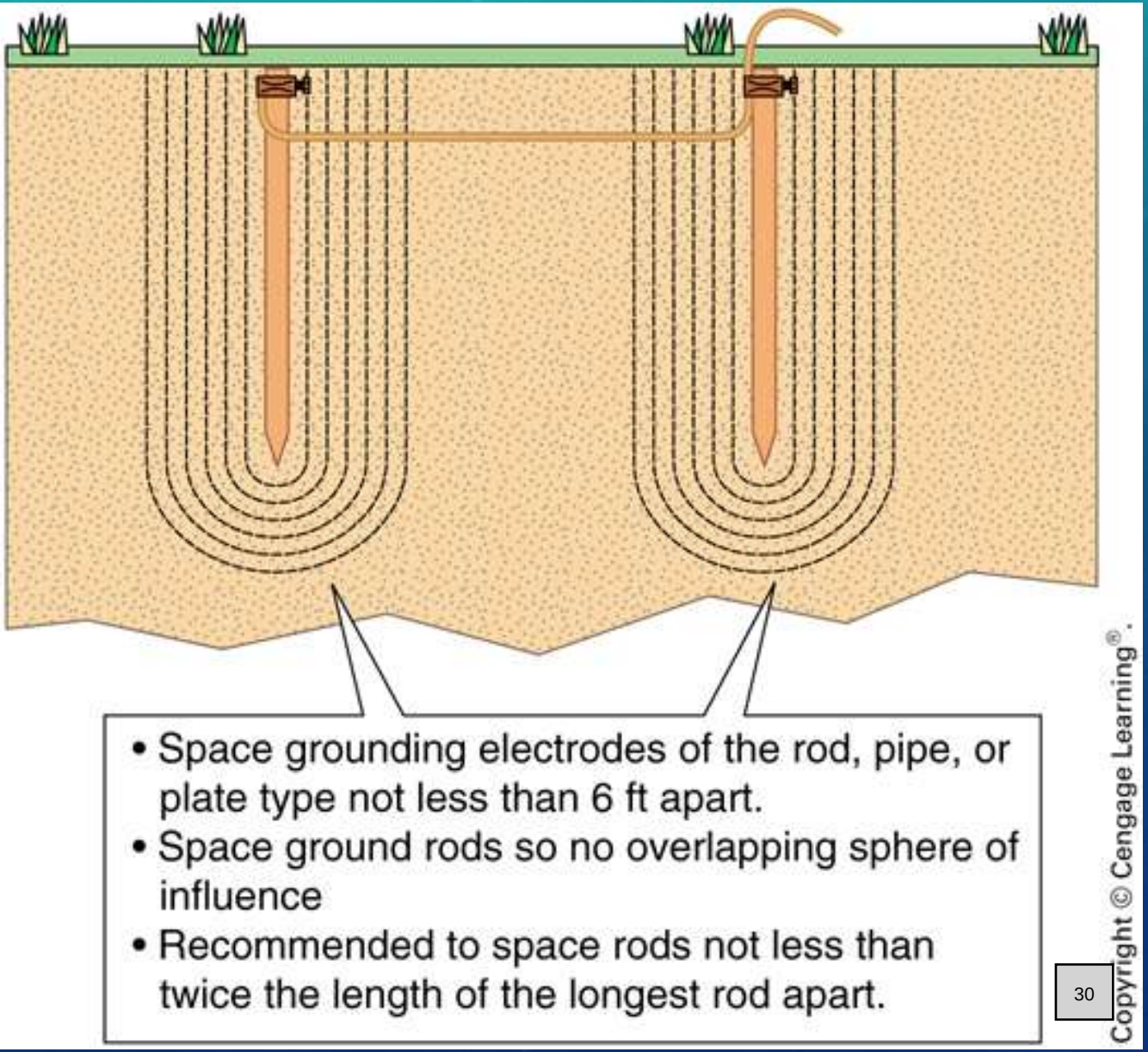

I – Note, Spacing of Rods

- The paralleling efficiency of ground rods is increased by spacing them twice the length of the longest rod
- This spacing may be required in manufacturer's installation requirements and if so stated, must be followed to comply with *110.3(B)*

250.53(G) Rod and Pipe Electrodes

- At least 8 ft. in contact with the soil
- If rock bottom is encountered, install at maximum 45°angle
- If rock bottom is then encountered, burial in trench 2½ ft. deep is permitted

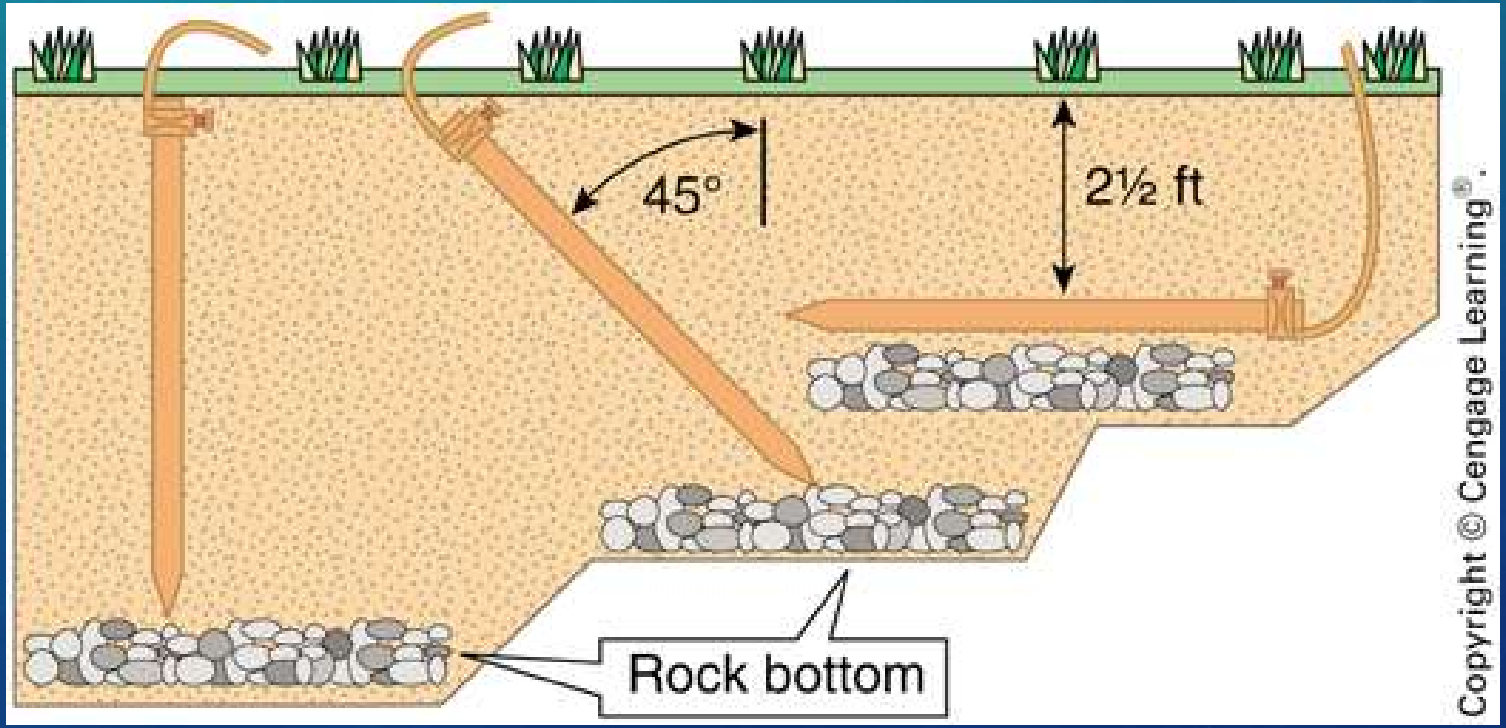

250.53(C) Bonding Jumper

- Bonding jumper is used to connect grounding electrodes together
- Install per 250.64(A), (B) and (E)
- Size per 250.66
- Connect per 250.70

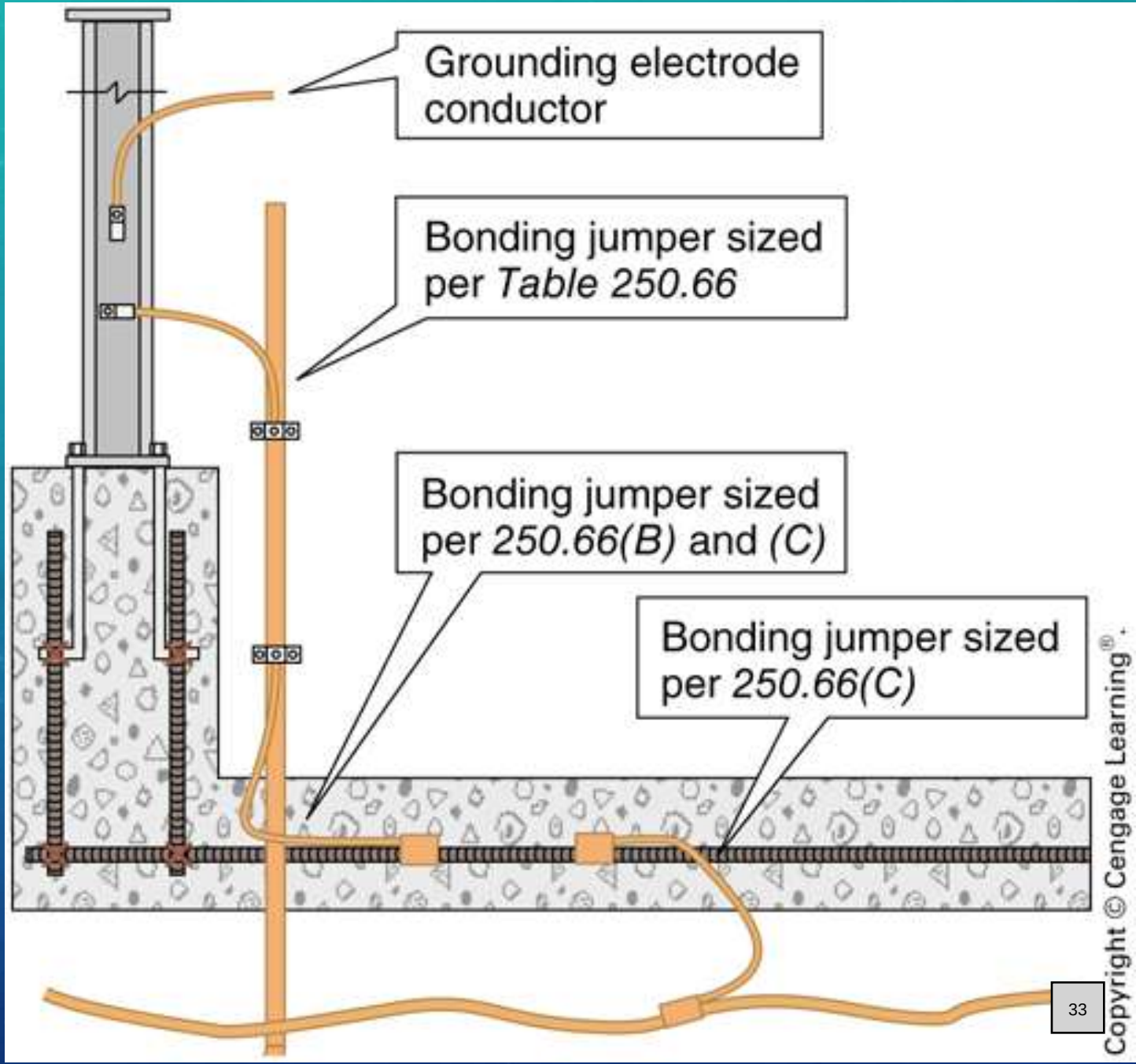

Bonded (Bonding) (*NEC® Article 100*)

- "Connected to establish electrical continuity and conductivity"
- In its simplest form, the definition means the conductor and connections to connect equipment together and to provide a complete path for current to flow
- Bonding ensures conductivity around suspect connections
- Conduit or equipment grounding conductor in Type MC or other wiring method are permitted to be used to bond (connect) enclosures together.
- The function of equipment grounding and bonding become inseparable

Bonded

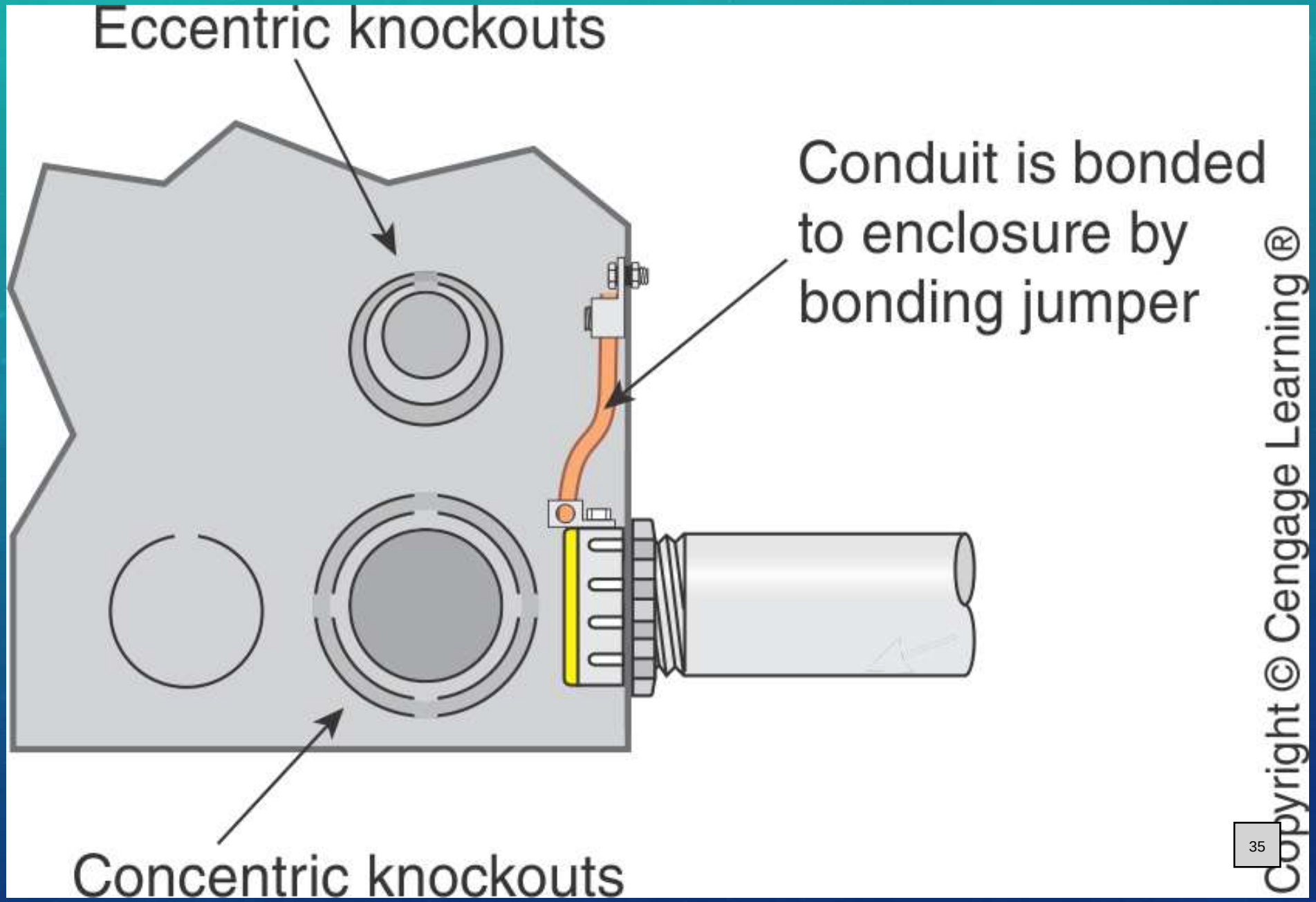

Bonding Conductor or Jumper (*NEC® Article 100*)

- "A conductor to ensure the required electrical conductivity between metal parts required to be electrically connected."
- Usually a wire-type conductor used to connect parts that are required to be electrically continuous
- Specific sizes are given for application

Bonding with Wiring Methods

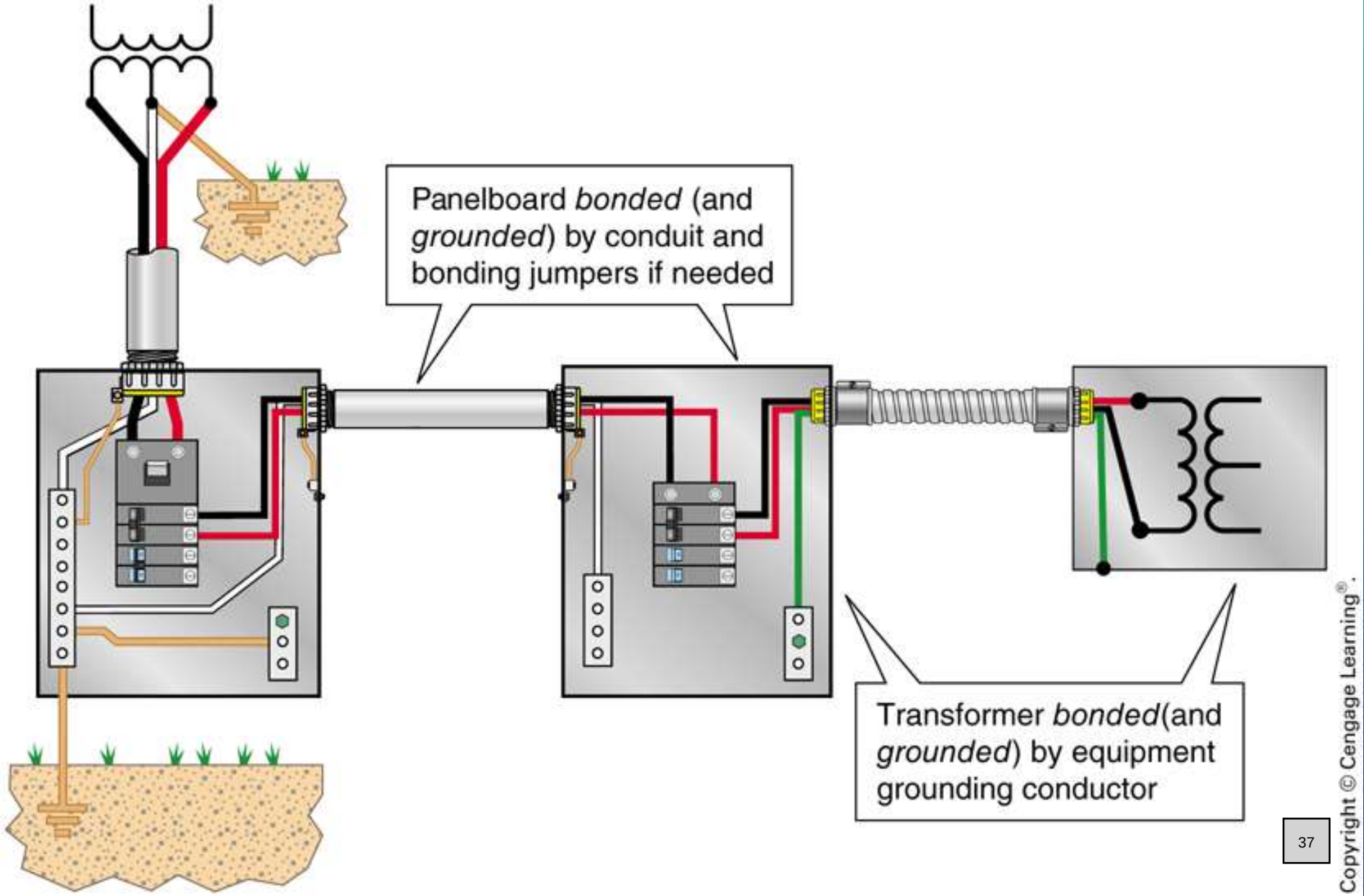

Main Bonding Jumper (*NEC® Article 100*)

- Must be large enough so it does not melt while carrying fault current
- Permitted to be a wire, a bus, or a screw
- Identical in function to “system bonding jumper”
- Provides return path for fault current
- Many rules on the Main Bonding Jumper are in *250.28*
- *Sized per 250.66 and 250.102*

100: Main Bonding Jumper

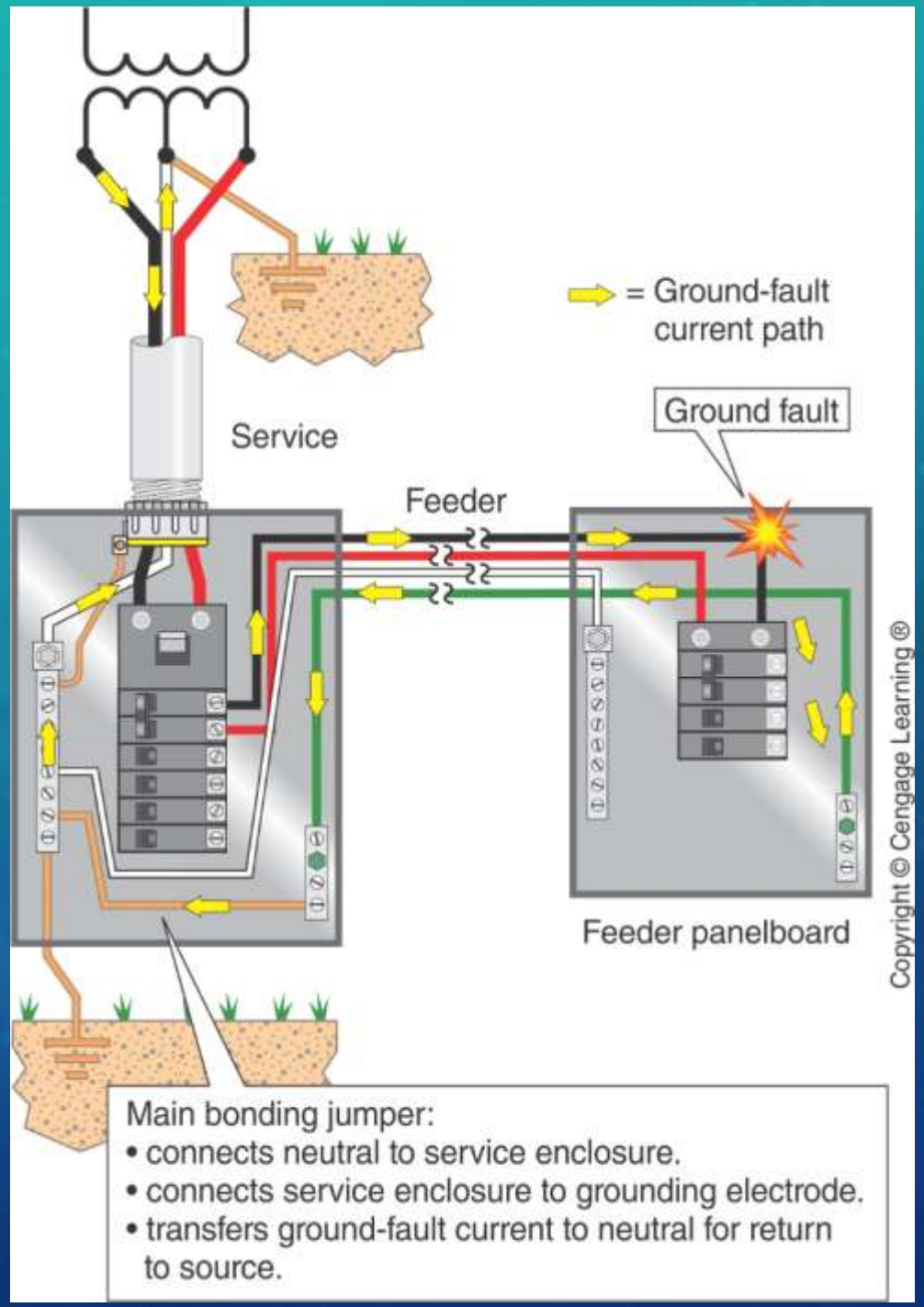

Ohio Certificate Renewal
"Since 1994"

Supply-Side Bonding Jumper (*NEC® Article 100*)

- Used for bonding raceways, and enclosures containing service conductors
- Also used to ensure bonding for metal enclosures for separately derived systems
- Bonding jumper sized from *Table 250.102(C)(1)* on the size of the ungrounded service conductor or the derived ungrounded conductor of separately derived system

Supply-Side Bonding Jumper (*NEC® Article 100*)

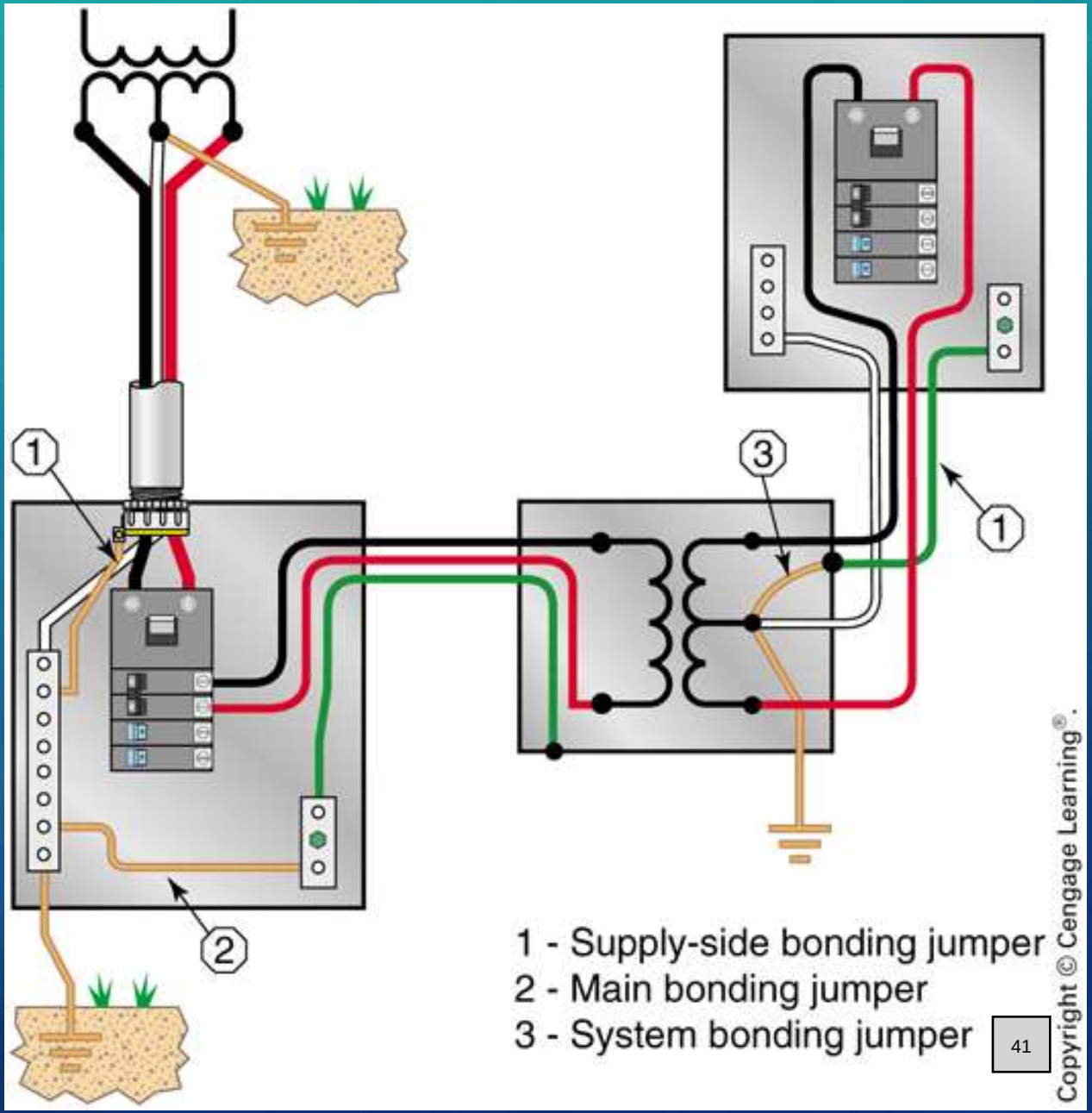

System Bonding Jumper (*NEC® Article 100*)

- "The connection between the grounded-circuit conductor and the supply-side bonding jumper or the equipment grounding conductor, or both, at a separately derived system." (*Article 100*)
- Identical in function to "main bonding jumper" for service
  - Must be large enough so it does not melt while carrying fault current
  - Permitted to be a wire, a bus, or a screw
  - Provides return path for fault current

System Bonding Jumper (*NEC® Article 100*)

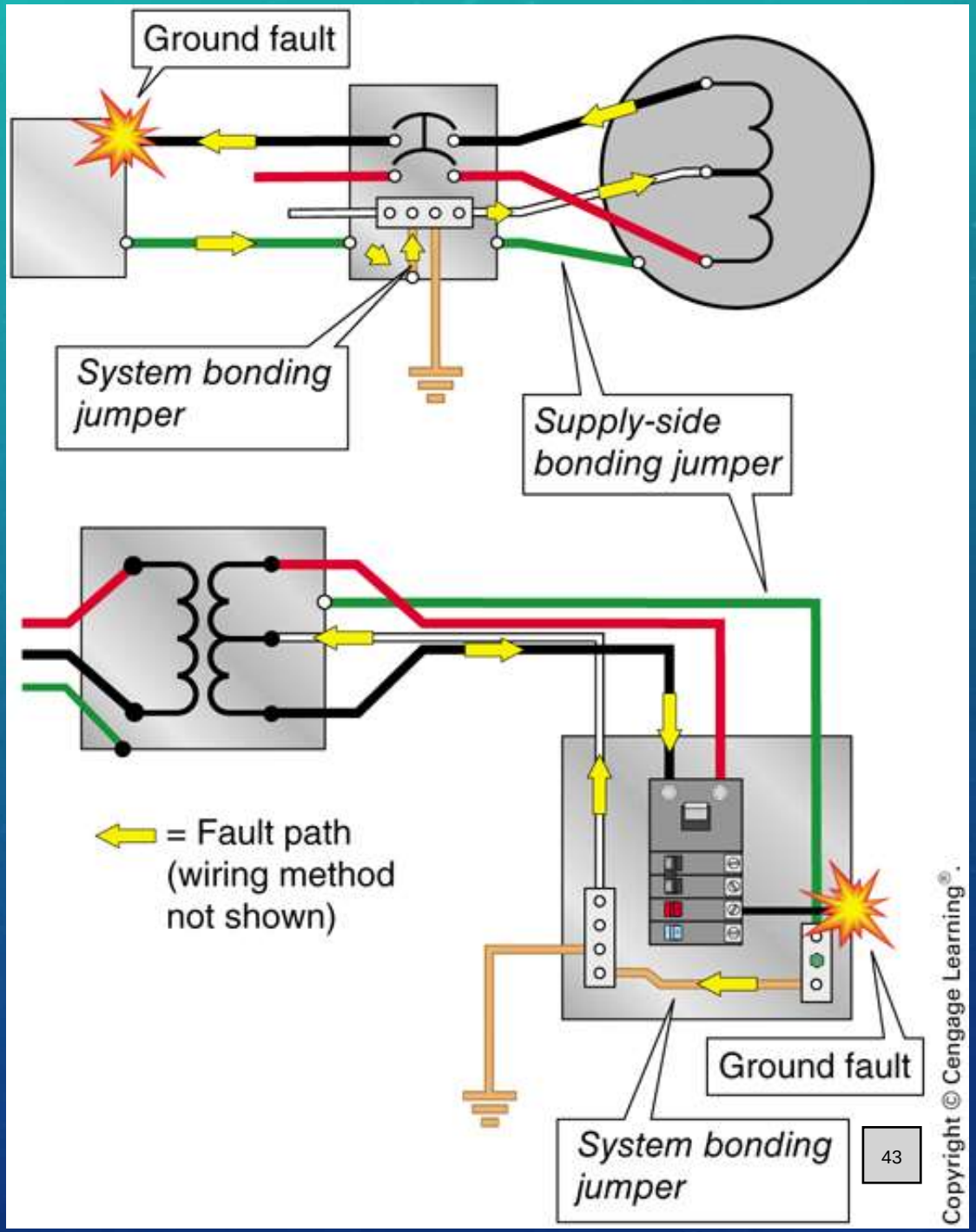

Equipment Grounding Conductor (EGC) (*NEC® Article 100*)

- "The conductive path(s) that provides a ground-fault current path and connects normally non–current-carrying metal parts of equipment together and to the system grounded conductor or to the grounding electrode conductor, or both."
- Conductive ground-fault current path is provided by the EGC
  - Paths recognized include a wire or bus, metallic raceways and metallic cable sheaths
- "Normally non-current-carrying metal parts of equipment …"
  - Equipment grounding conductors do not normally carry current
  - Neutral conductors carry current under normal conditions

Equipment Grounding Conductor (EGC) (*NEC® Article 100*)

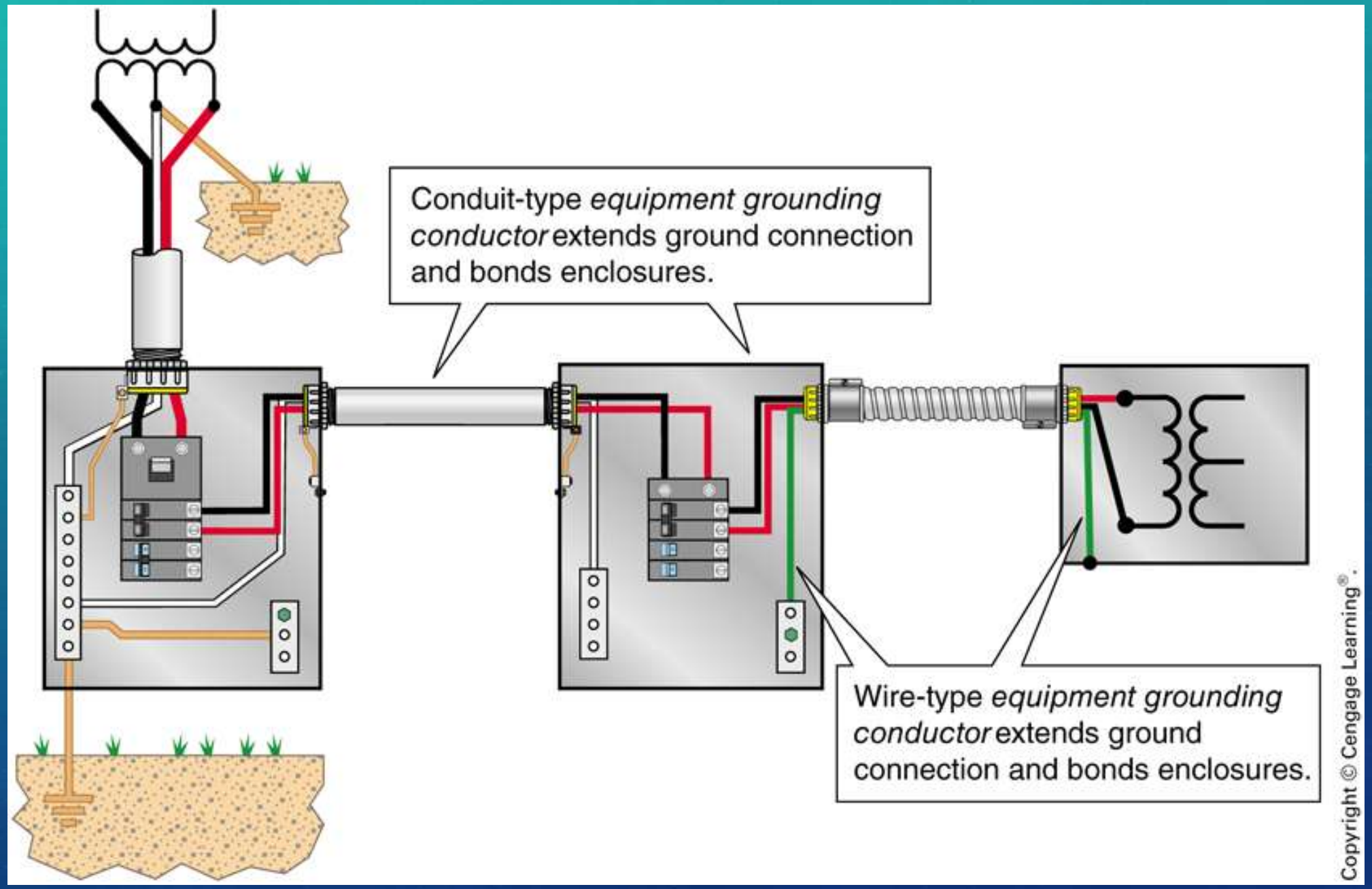

Grounding Electrode (*NEC® Article 100*)

- New definition in 2005 *NEC®*
  - Revised in 2008 *NEC®*
- Descriptions of grounding electrodes required to be used are in *250.52(A)*
- Grounding electrodes are <u>never used</u> to provide a fault-current path
- Used to make an earth connection
- See Appendix C of this text for testing methods of grounding electrodes

Grounding Electrode Conductor (*NEC® Article 100*)

- "A conductor used to connect the system grounded conductor or the equipment to a grounding electrode or to a point on the grounding electrode system."
- Specific rules are provided in *Article 250* for the sizing and installation of grounding electrode conductors, as well as where they are required to be connected to the electrical system or equipment
  - In some cases, specific requirements; in others, considerable flexibility on installation methods

Grounding Electrode

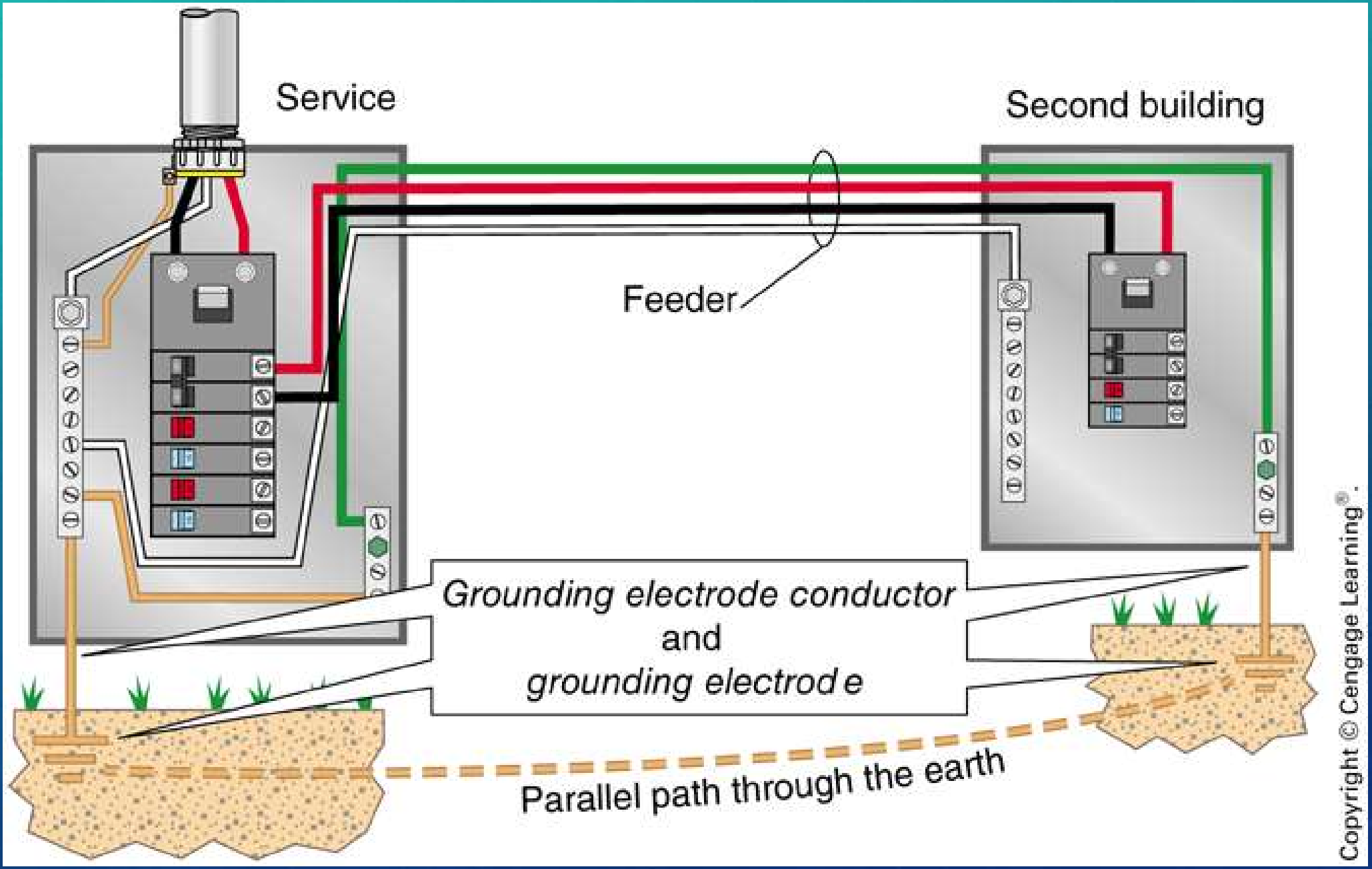

Intersystem Bonding Termination (*NEC® Article 100*)

- "A device that provides a means for connecting intersystem bonding conductors for communications systems to the grounding electrode system."
  - Revised for the 2014 *NEC®* and more specific
  - Provides common location for connecting bonding conductors for communications systems
  - Common bonding helps prevent flashover due to elevated voltage events

Intersystem Bonding Termination (*NEC® Article 100*) (2 of 2)

Photograph is reprinted with permission and provided courtesy of ERICO International Corporation

Separately Derived System (*NEC® Article 100*)

- "An electrical source, other than a service, having no direct connection(s) to circuit conductors of any other electrical source other than those established by grounding and bonding connections."
- Is a premises wiring system
- Not directly supplied by the electric utility
- Transformers are "equipment other than a service."
- Transformers are "separately derived" if no bonding jumper from primary to secondary
- Path through the earth, metal enclosures, metallic raceways and equipment grounding conductors do not constitute a "direct electrical connection"

Article 100: Separately Derived System

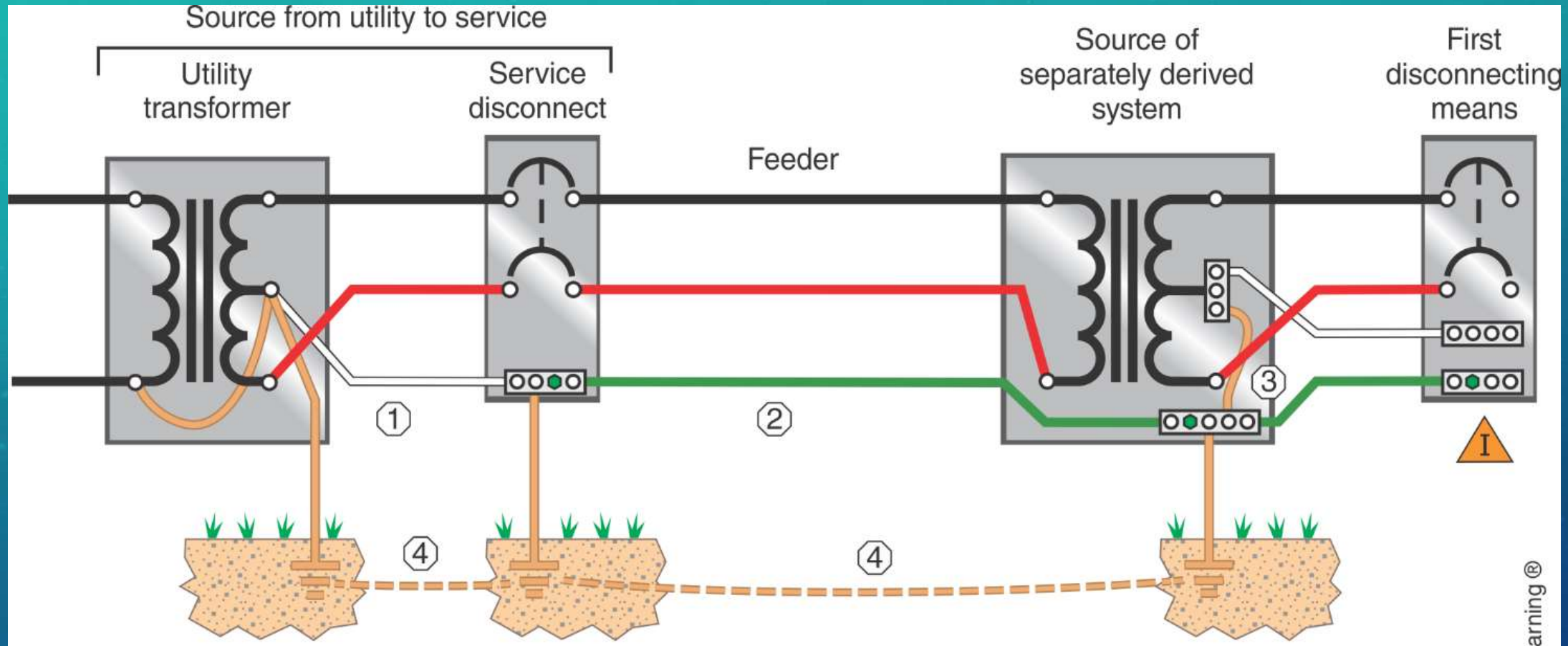

1. Neutral connects utility system to service.
2. Equipment grounding conductor connects service to transformer enclosure.
3. System bonding jumper creates connection of derived system neutral to utility system.
4. Path through the earth provides another connection of the two systems.

I = Neutral Isolated

Generator-Supplied Separately Derived Systems

- For determining whether the system is separately derived or not, observe how the grounded conductor is treated in the transfer switch(es)
  - If switched with the ungrounded or phase conductors, the generator-supplied system is separately derived
  - If not switched, it is not separately derived

Generator-type separately derived system

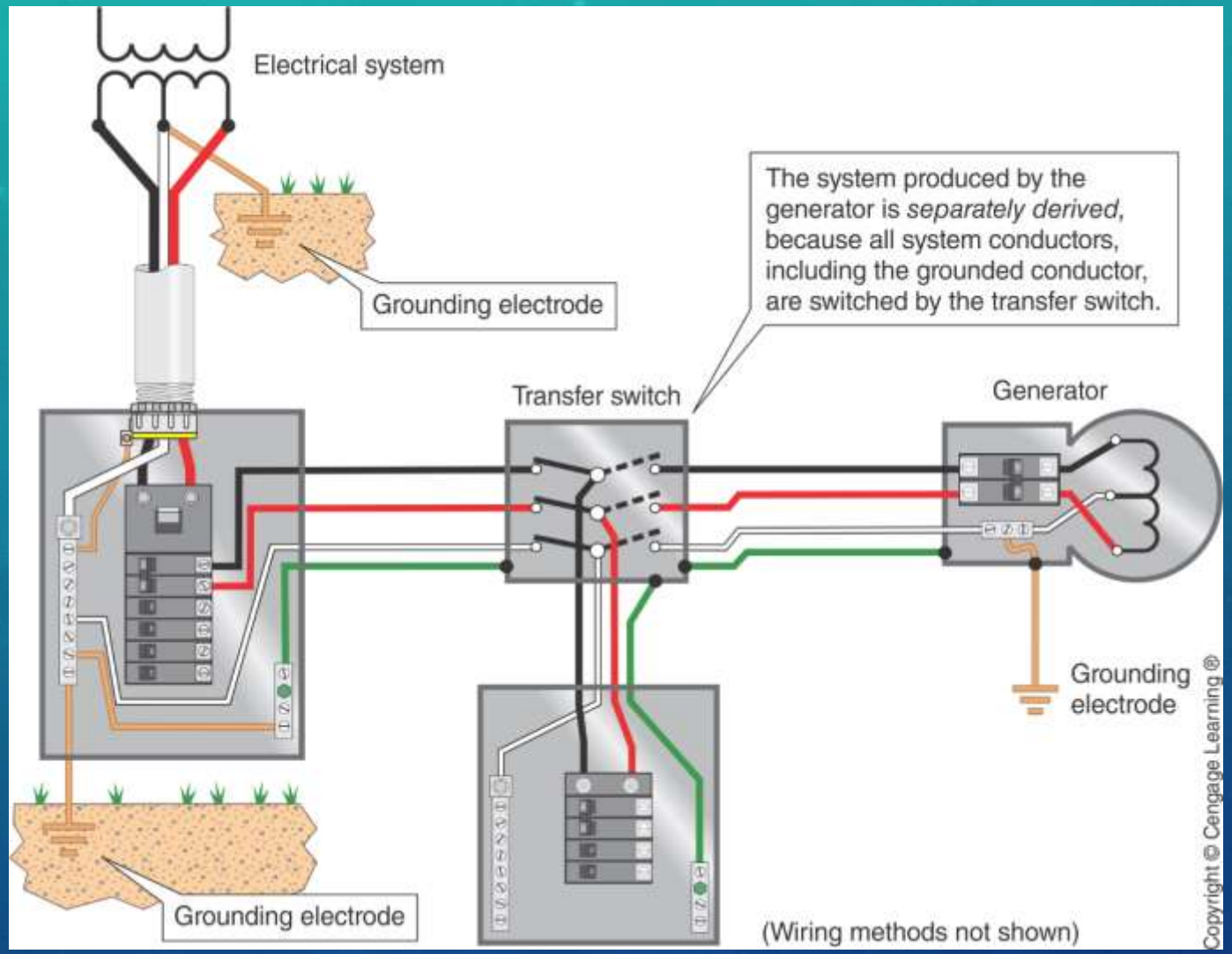

FIGURE I-19 Generator-type separately derived system.

The Ground-Fault Path

- The definitions in *Article 100* and *250.2* provide important concepts regarding an effective ground-fault return path
- Low-impedance path facilitates the operation of overcurrent devices
- Removing the fault quickly reduces the thermal and magnetic stresses
  - Most overcurrent devices are “inverse time” (the greater the current, the faster the operation of the overcurrent device)

Effective Ground-Fault Current Path (*NEC® Article 100*)

- "An intentionally constructed, low-impedance electrically conductive path designed and intended to carry current under ground-fault conditions from the point of a ground fault on a wiring system to the electrical supply source.
- "Facilitates the operation of the overcurrent device or ground fault detectors."
- Intentionally constructed, Deliberate steps taken to create
- Doesn't "just happen"
- Properly connect all components
- Carries fault-current to facilitate operation of overcurrent device or ground-fault detector
- Tested to carry full load current indefinitely

Ground Fault Path through the Earth

- The path through the earth is in parallel with ground-fault current return path where more than one connection to earth exists
- The earth is not considered an “effective ground-fault current path”
- Connections are made to earth for other purposes, but never to carry fault current
- Path only through the earth will result in electrical equipment presenting a dangerous electric shock hazard

Earth Path Prohibited

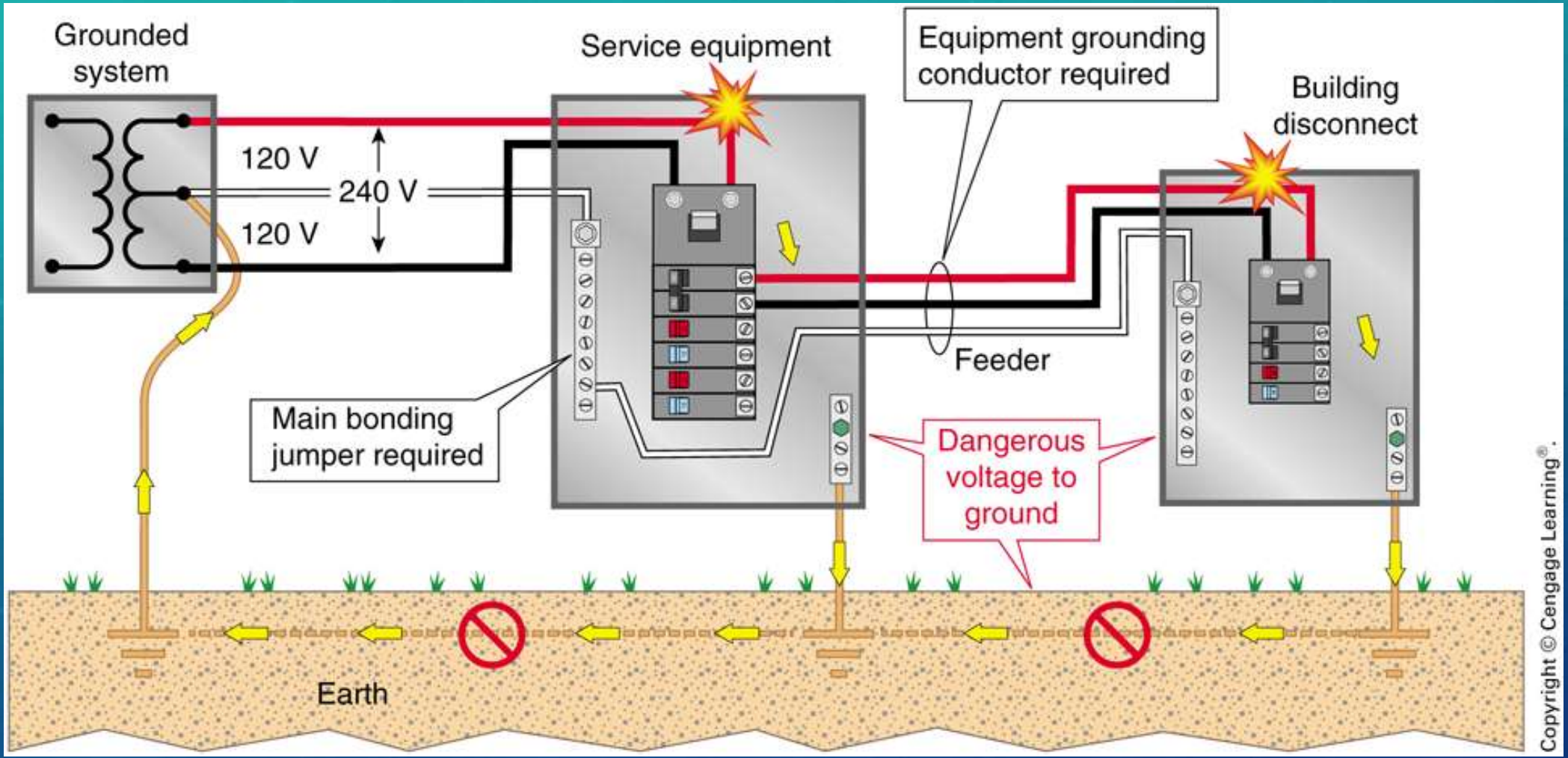

FIGURE I-23 Earth return prohibited.

250.20 AC Systems to Be Grounded

- Alternating-current systems are required to be grounded if the system meets any of the conditions in *250.20(A)*, *(B)*, *(C)*, or *(D)*
  - Other systems are permitted to be grounded
    - Compliance with Article 250 required
  - Voltage supplied by the system is considered as a general rule
  - Use of neutral for 3-phase systems also considered
- Most circuits and systems that are not required to be grounded are permitted to be grounded
  - A few circuits are not permitted to be grounded
  - If systems are grounded, the methods must comply with *Article 250*

Systems Required to be Grounded 250.20(B)(1)

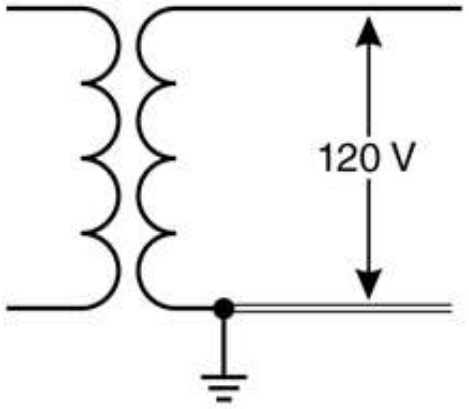

120 volt, 1-phase, 2-wire system

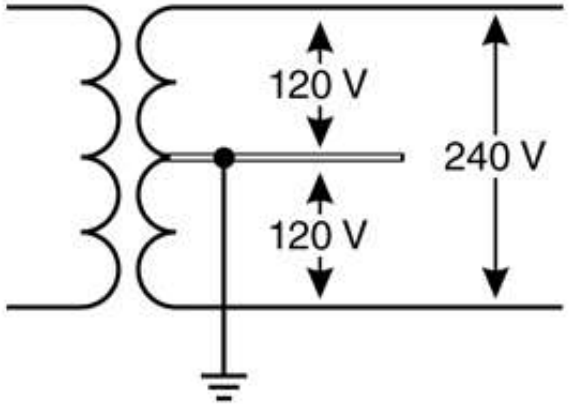

A 240 volt transformer is center-tapped to create 120/240 volt, 1-phase, 3-wire system

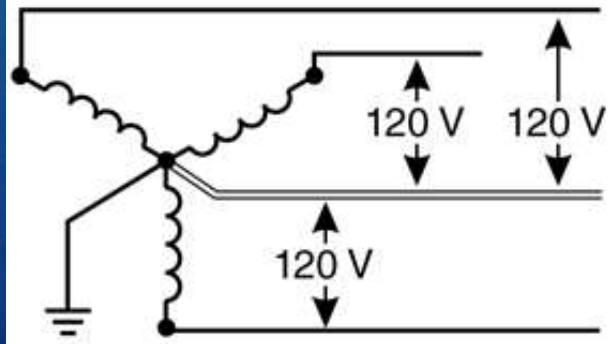

Three 120 volt transformers are connected at one end to form wye configuration. Phase-to-phase voltage is:
120 x 1.732 = 208 volts

Systems 50 to 1000 Volts Required to be Grounded (1 of 2)

- Where the system is 3-phase, 4-wire, wye connected in which the neutral is used as a circuit conductor
- Typical voltages:
  - 208Y/120;
  - 480Y/277;
  - 575Y/332;
  - 600Y/346

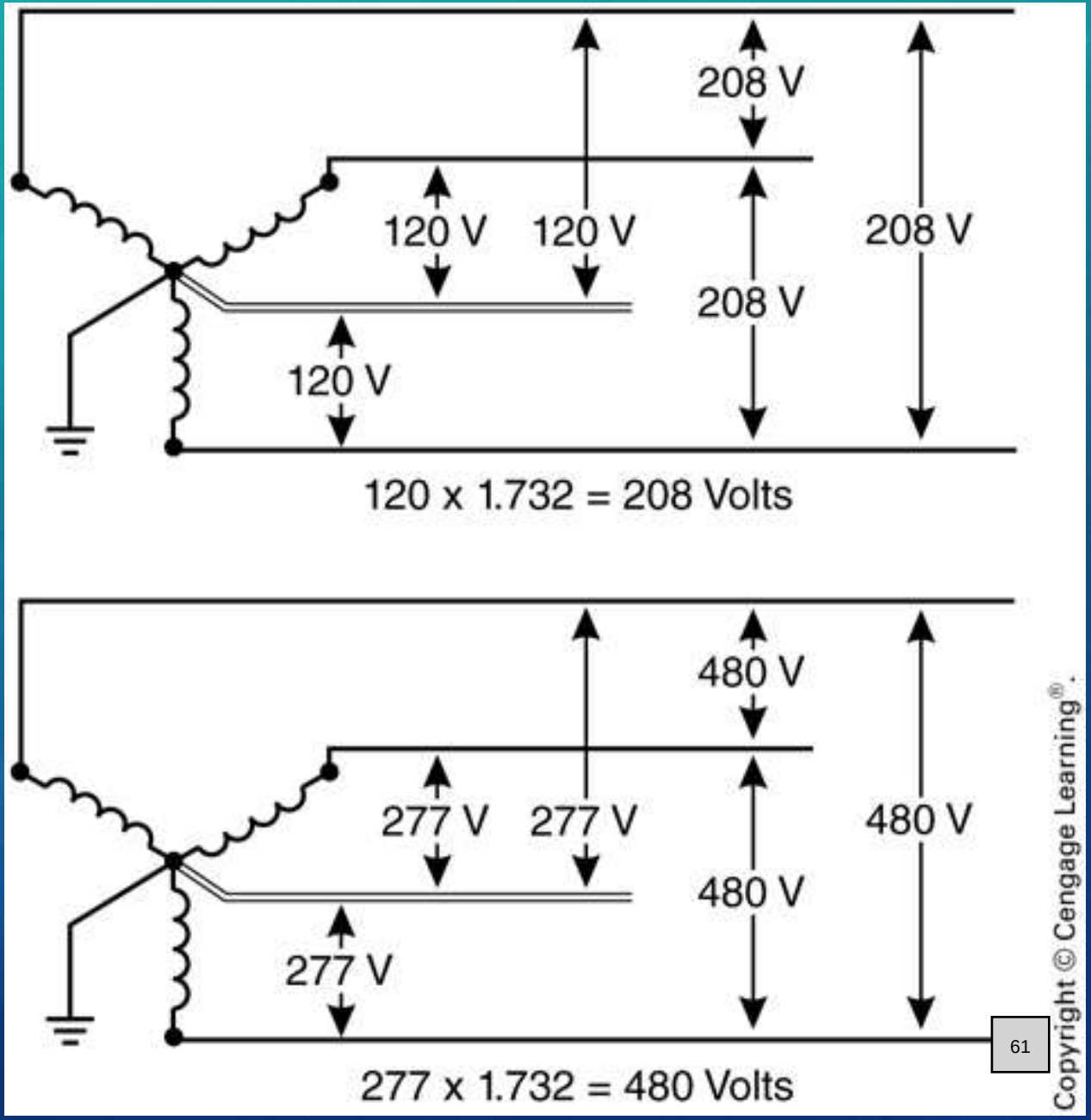

FIGURE 2-5 Wye-connected systems required to be grounded, *250.20(B)(2)*.

Systems 50 to 1000 Volts Required to be Grounded (2 of 2)

- Where the system is 3-phase, 4-wire, delta connected in which the midpoint of one phase winding is used as a circuit conductor
- High-leg identification required per *408.3(F)(1)*

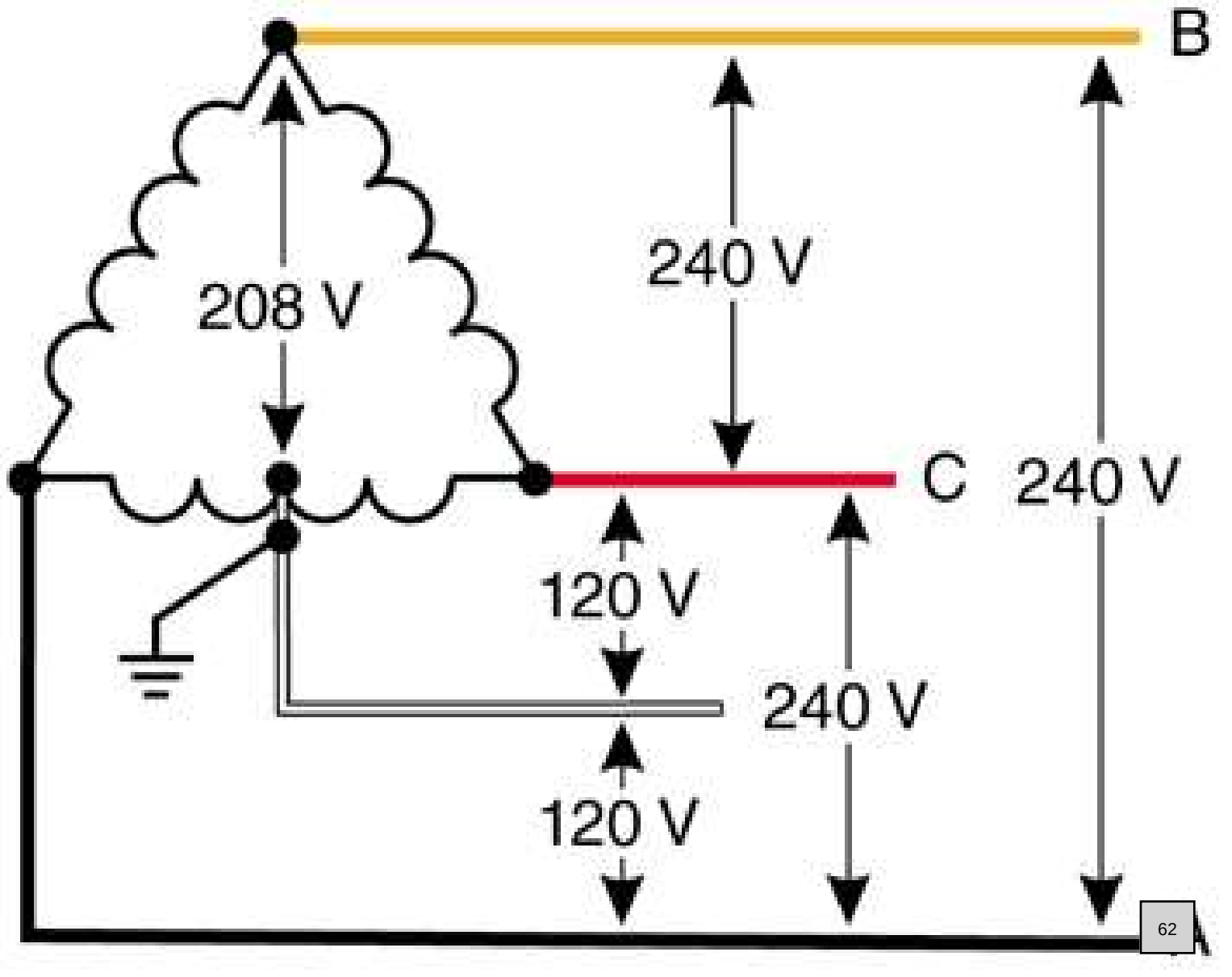

FIGURE 2-6 Delta-connected systems required to be grounded, *250.20(B)(3)*.

Conductor with higher voltage to ground

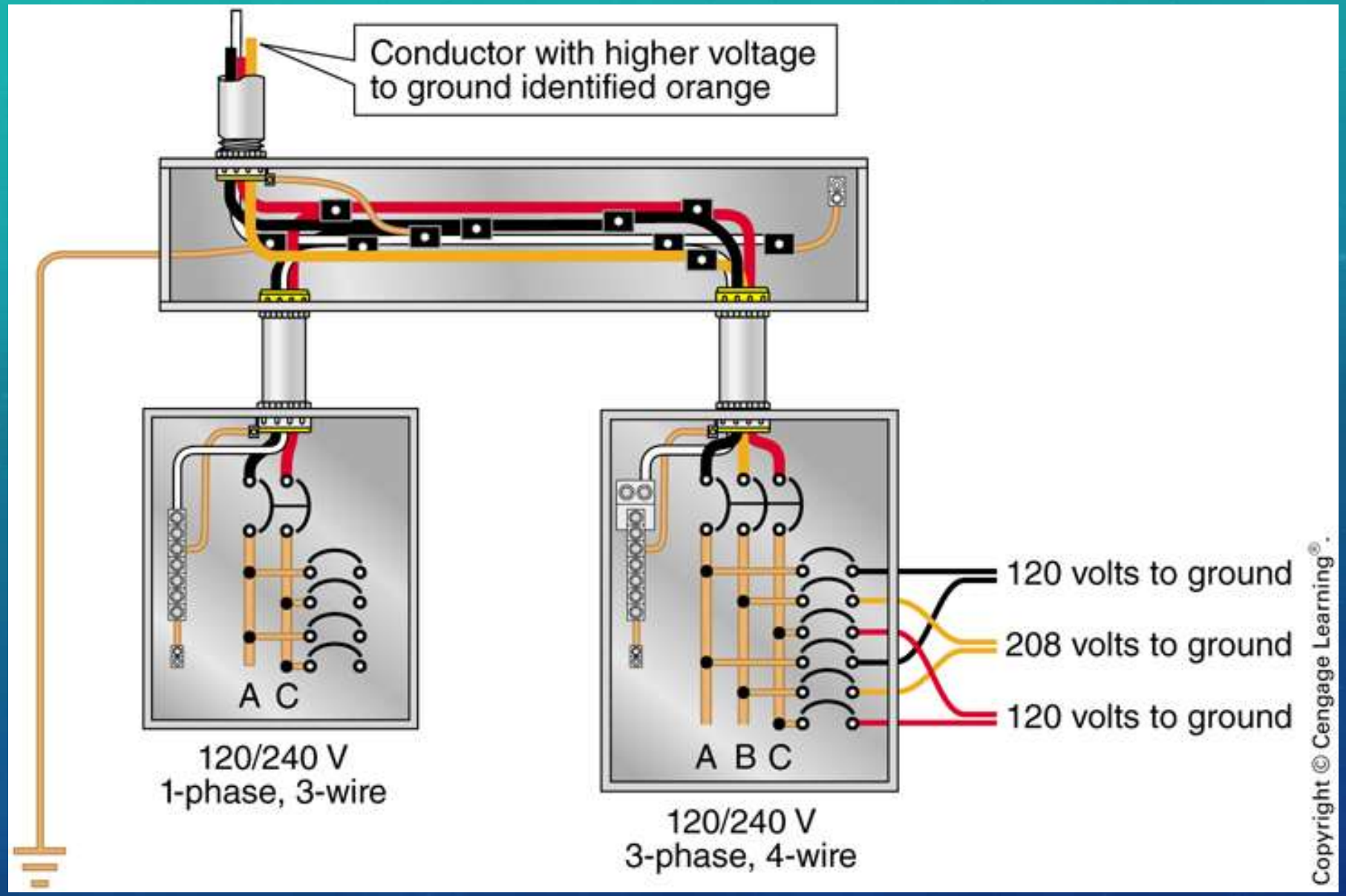

FIGURE 2-7 Conductor with higher voltage to ground, *250.20(B)(3)*.

250.24(A) System Grounding Connections

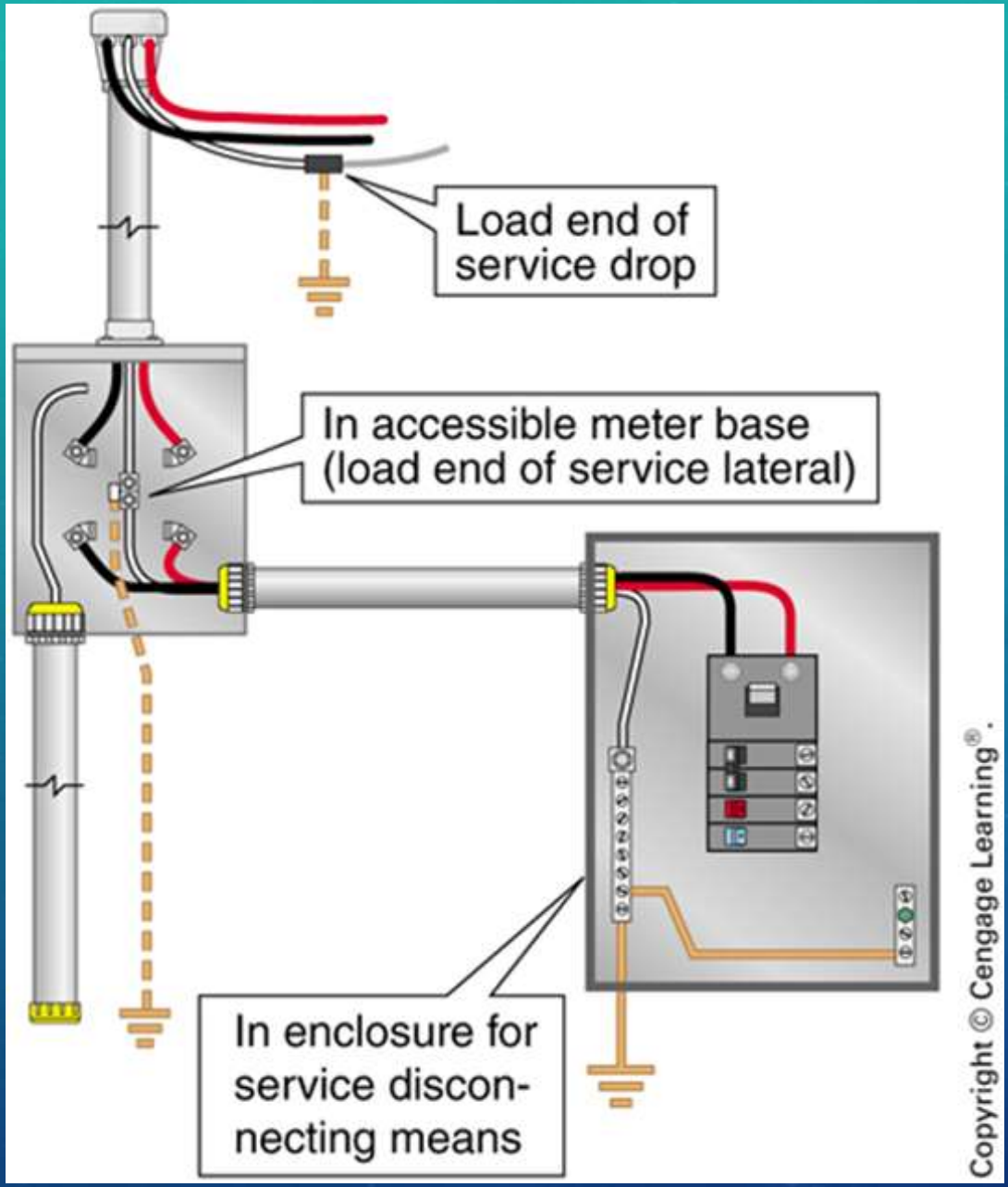

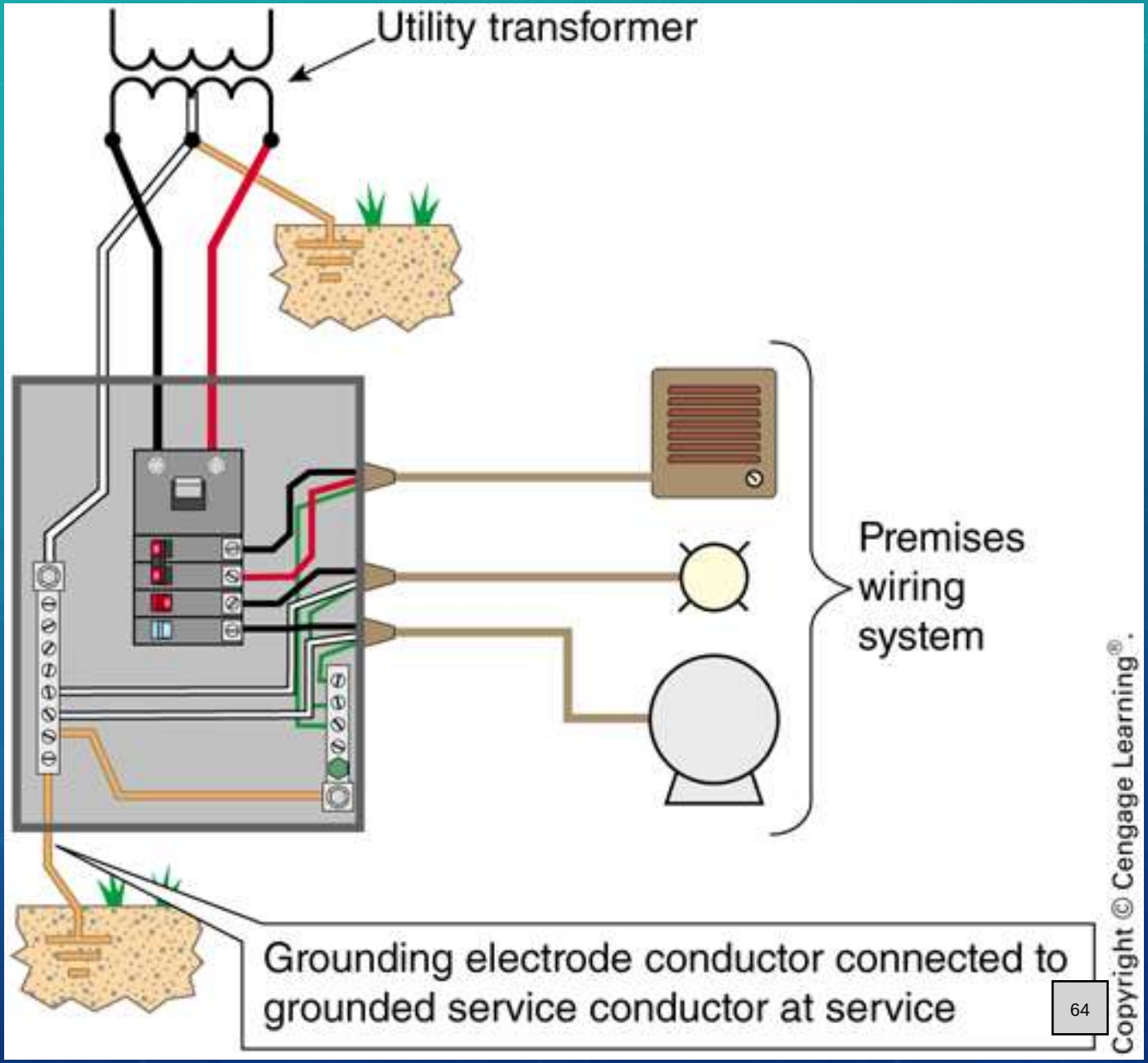

Generally Accepted Locations

1. At the weatherhead for overhead services
2. At the meter socket or current transformer enclosure (verify with the utility and electrical inspector)
3. At a wireway or auxiliary gutter on the line side of the service equipment
4. Within the service equipment enclosure

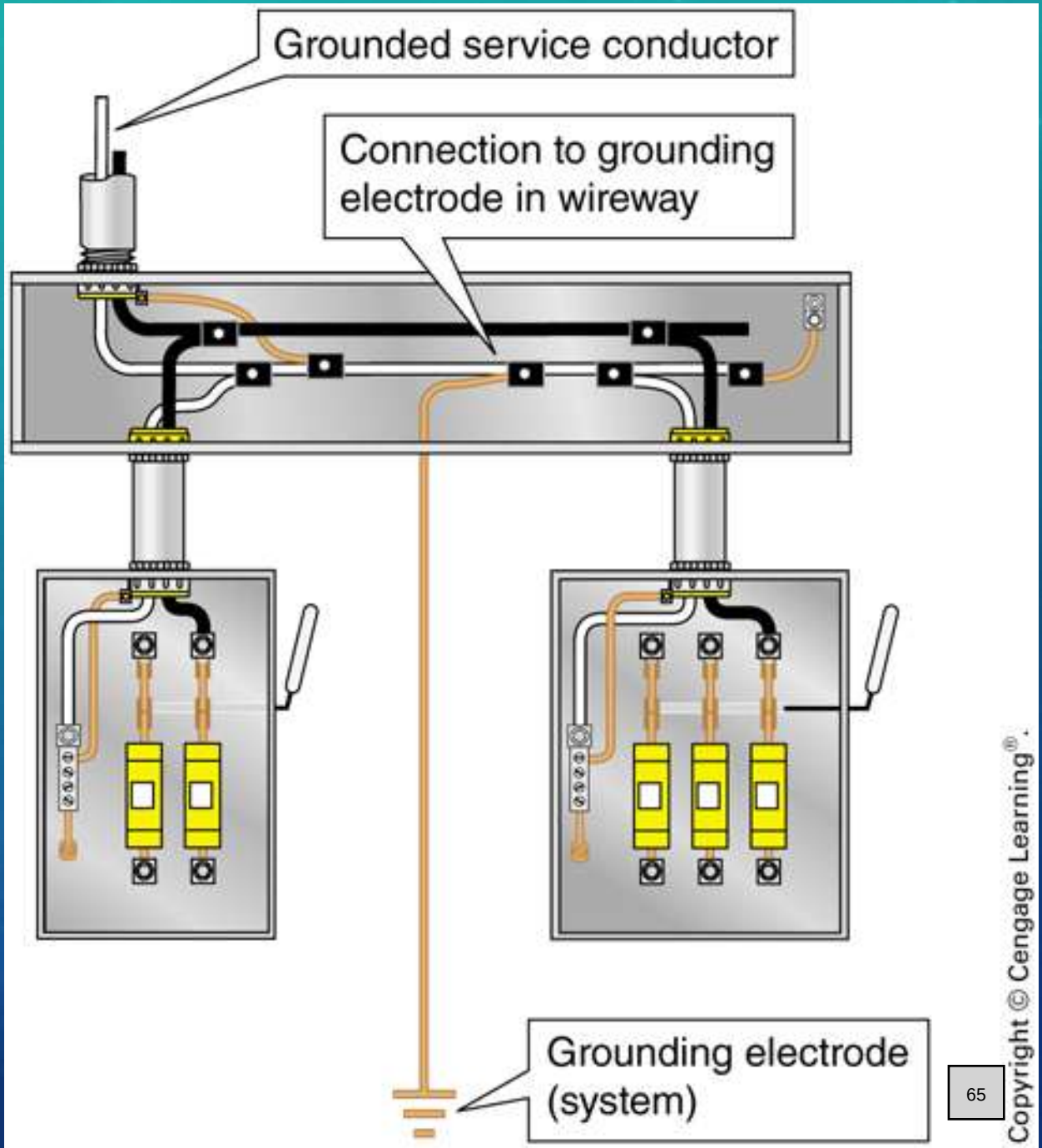

250.24(A)(4) Main Bonding Jumper as Wire or Busbar

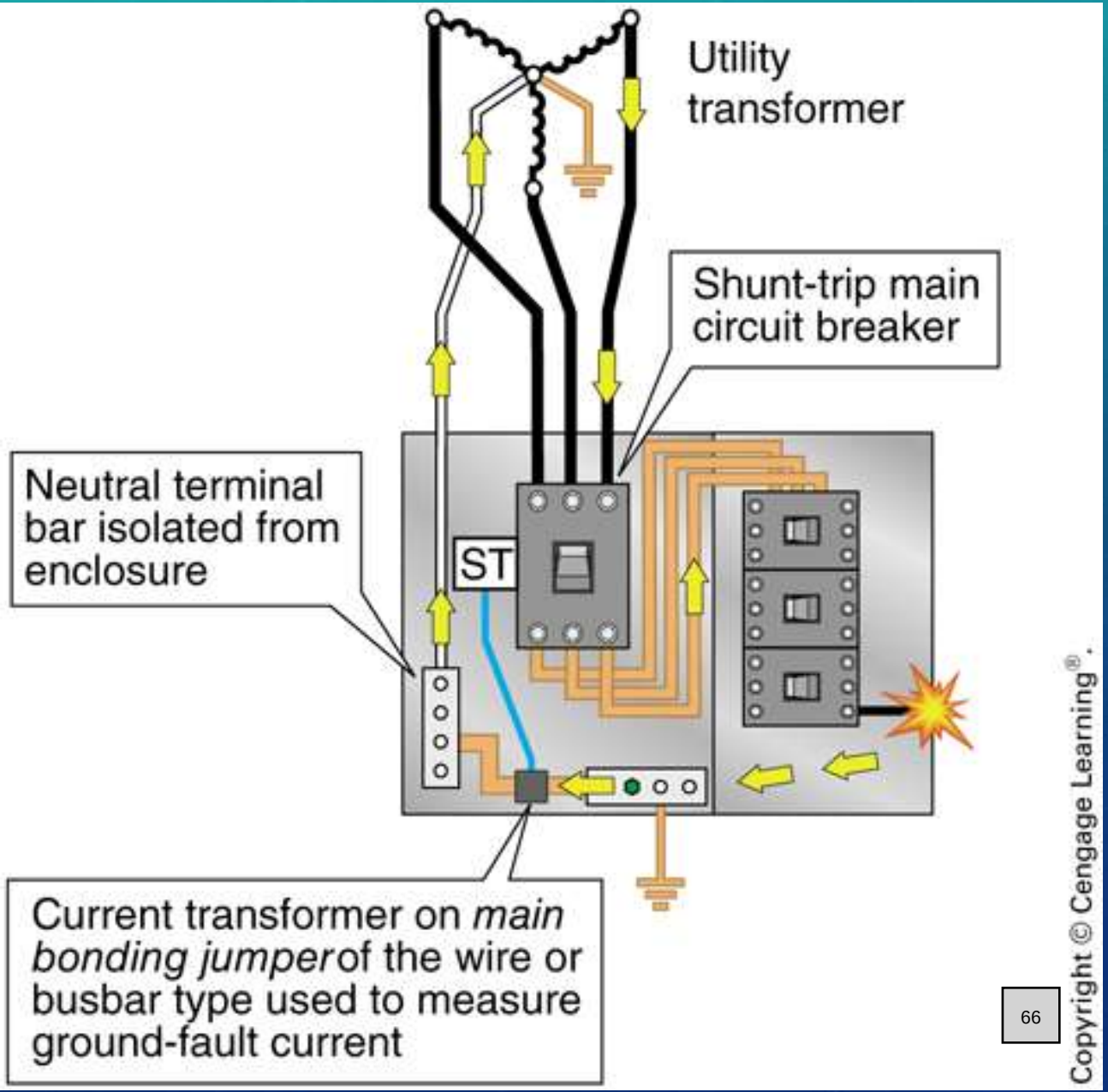

250.24(A)(5) Load-Side Grounding Connections

- A grounding connection is not permitted on the load side of the service disconnecting means unless permitted in Article 250
  - Such as a panel or junction box, down stream of the Service Disconnect
  - Neutral terminal bar isolated from enclosure
  - Equipment grounding conductor connects to enclosure
- See 250.30 for separately derived systems, 250.32 for connections at separate buildings or structures and 250.142 for other permitted uses

Neutral isolated on load side of service

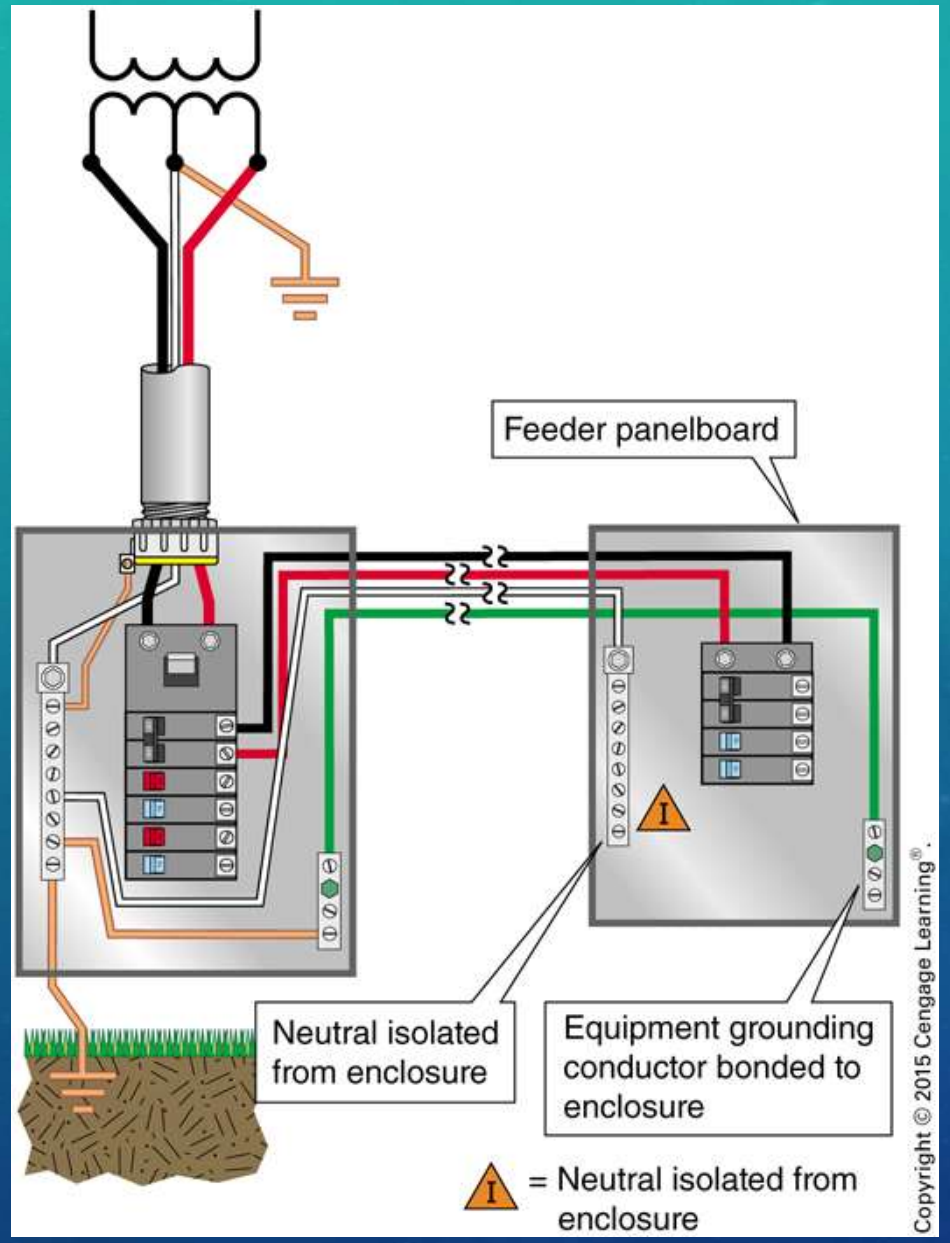

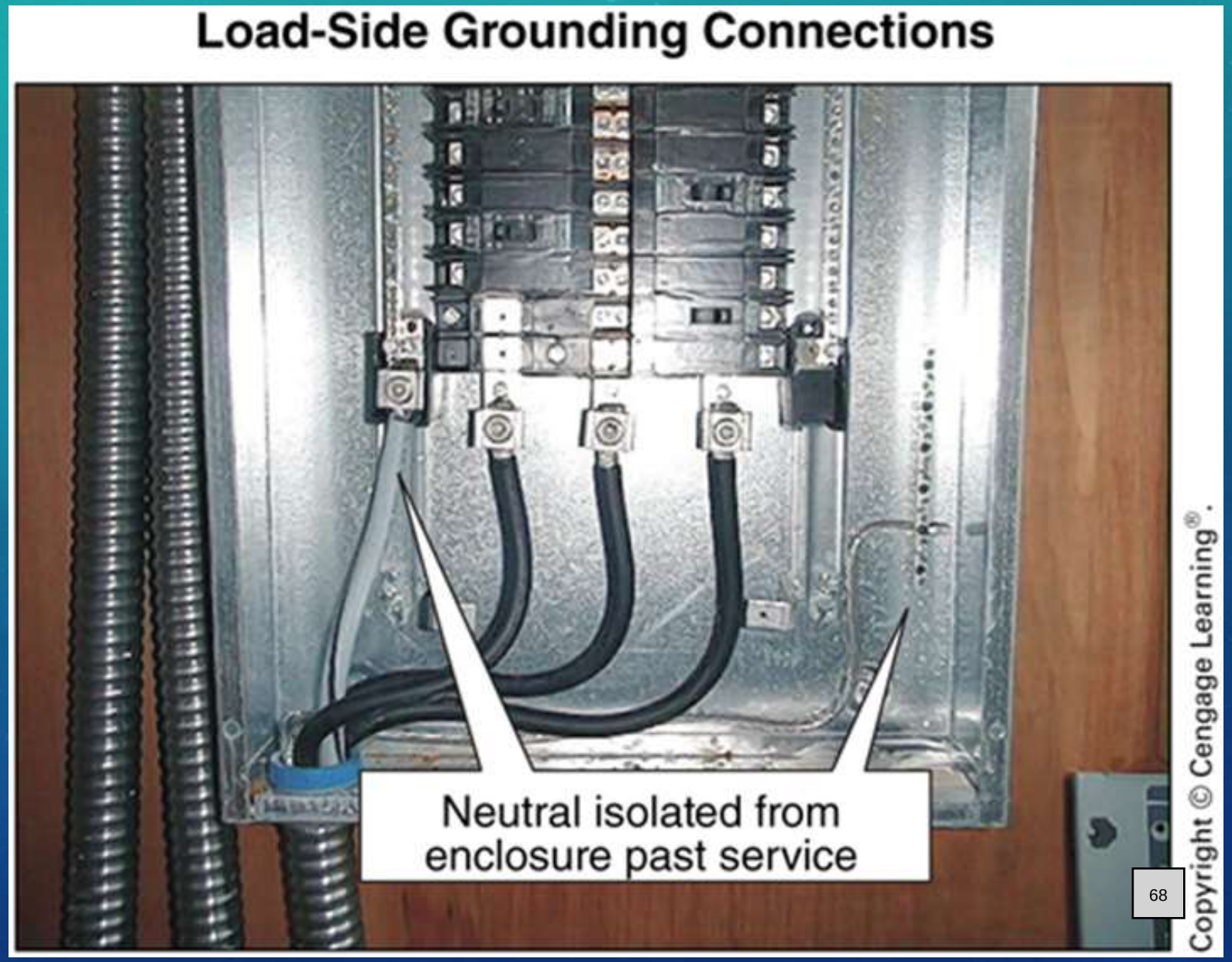

Hazard of Using Neutral to Ground Equipment

- If equipment is grounded to the neutral past the service, a loose neutral connection will result in a shock hazard if a ground fault occurs
- Current will flow across the raceway system
- Electricity will take every pathway available

Grounded Conductor to Service Equipment

- If an ac system operates at less than 1000 volts and is grounded at any point, the grounded conductor is required to run to each service disconnecting means and to be connected to it by a main bonding jumper

Grounded Conductor to all Service Equipment

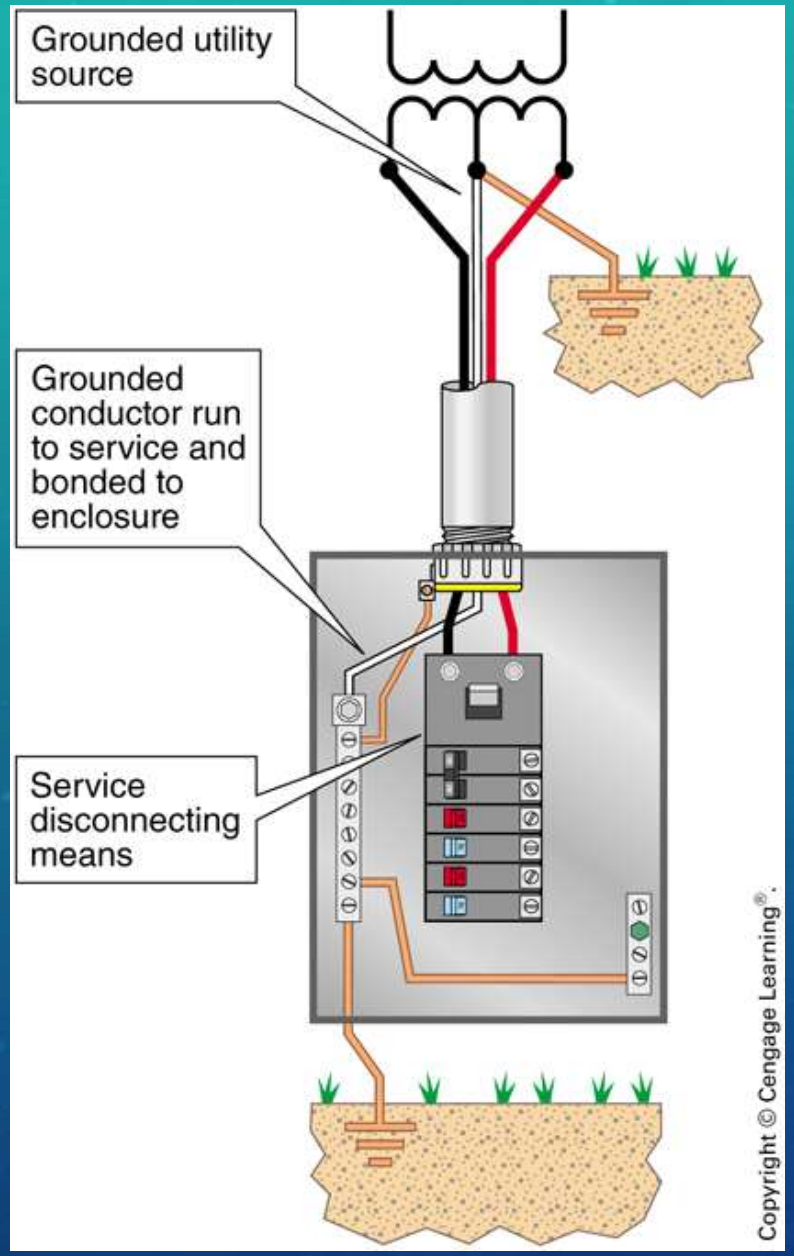

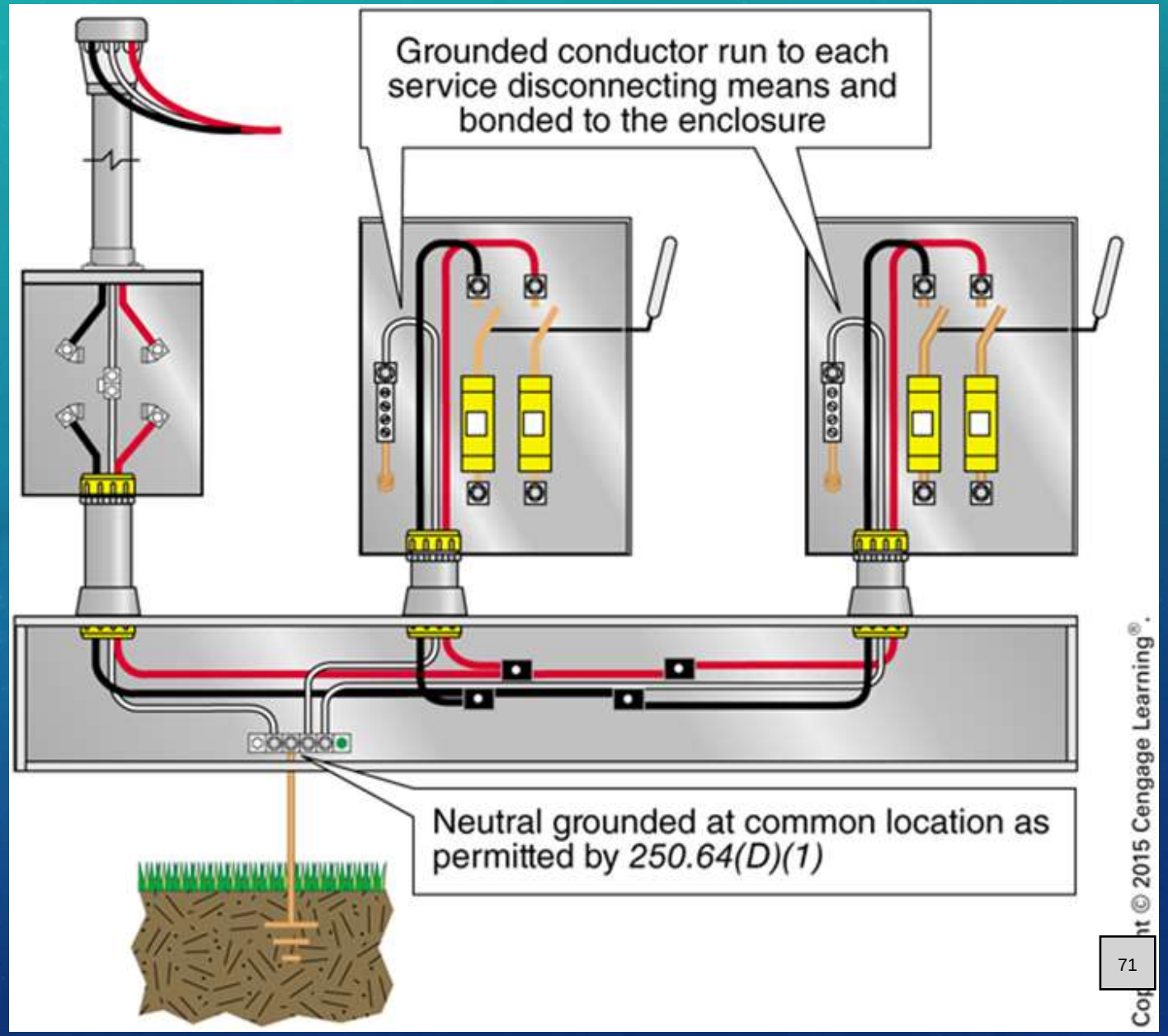

250.24(C) Grounded Conductor Brought to Service Equipment (2 of 3)

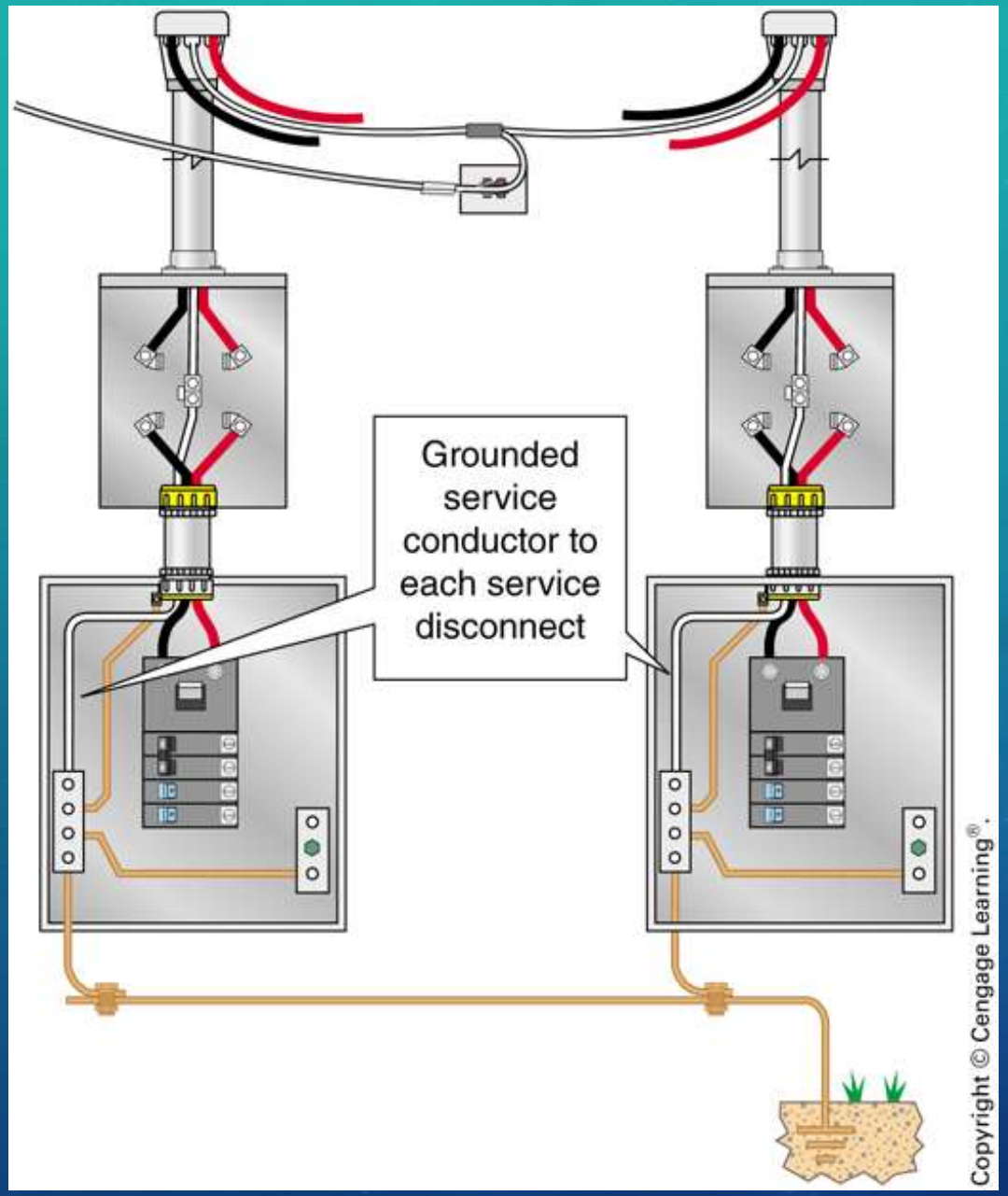

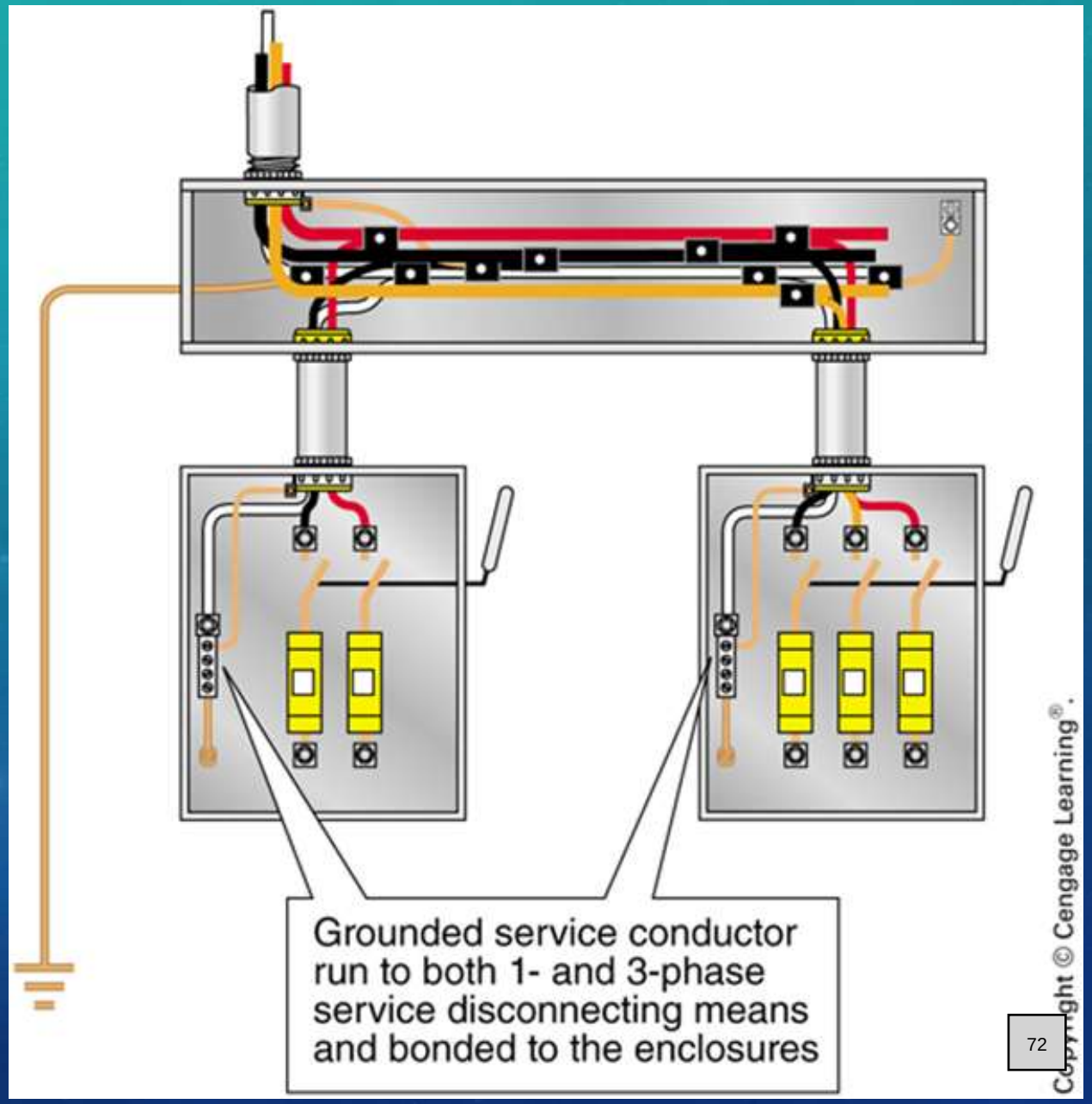

250.24(C)(1) Sizing for Single Raceway or Cable

- Grounded system conductor (often a neutral) is required to be not smaller than the conductor specified in *Table 250.102(C)(1)*
- Not required to be larger than the largest ungrounded service-entrance conductor
- Rule contemplates all service conductors are in a single conduit, wireway or cable, though they may be installed in Parallel Raceways
  - Obtain size of service-entrance conductors
  - Use the size of these conductors in *Table 250.102(C)(1)* to determine the minimum size of the grounded system conductor
  - Compare to the size of grounded conductor required from load calculation in *220.61*
  - Install the largest of these conductors

250.24(C)(1) Sizing for Parallel Raceway or Cable

- For parallel sets of conductors installed in compliance with *310.10(H)*:
  - If in one raceway such as a wireway or cable, determine the area of the largest set of conductors in parallel and consider as one conductor
  - Follow *Table 250.102(C)(1)* for the minimum size of neutral conductor
  - If the area of the largest phase set of conductors is larger than *Table 250.102(C)(1)*, apply the 12.5% rule
    - Total Circular Mill, x 12.5% = smallest conductor is allow to be.
    - Refer to NEC chapter 8, Table 9 for Circular Mill of Conductors

250.24(C)(1) Sizing for Single Raceway or Cable

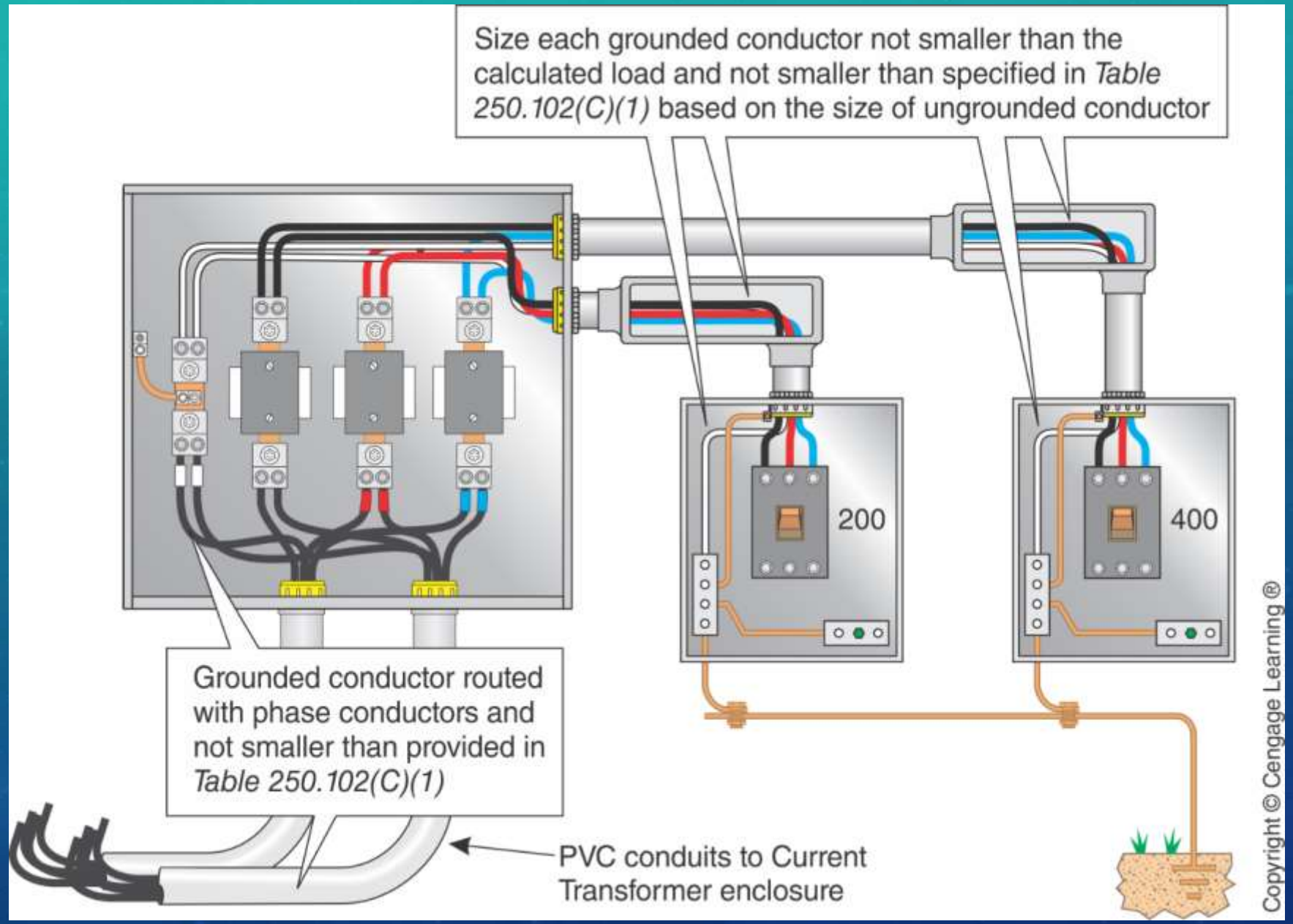

Routing and Sizing Grounded Conductor

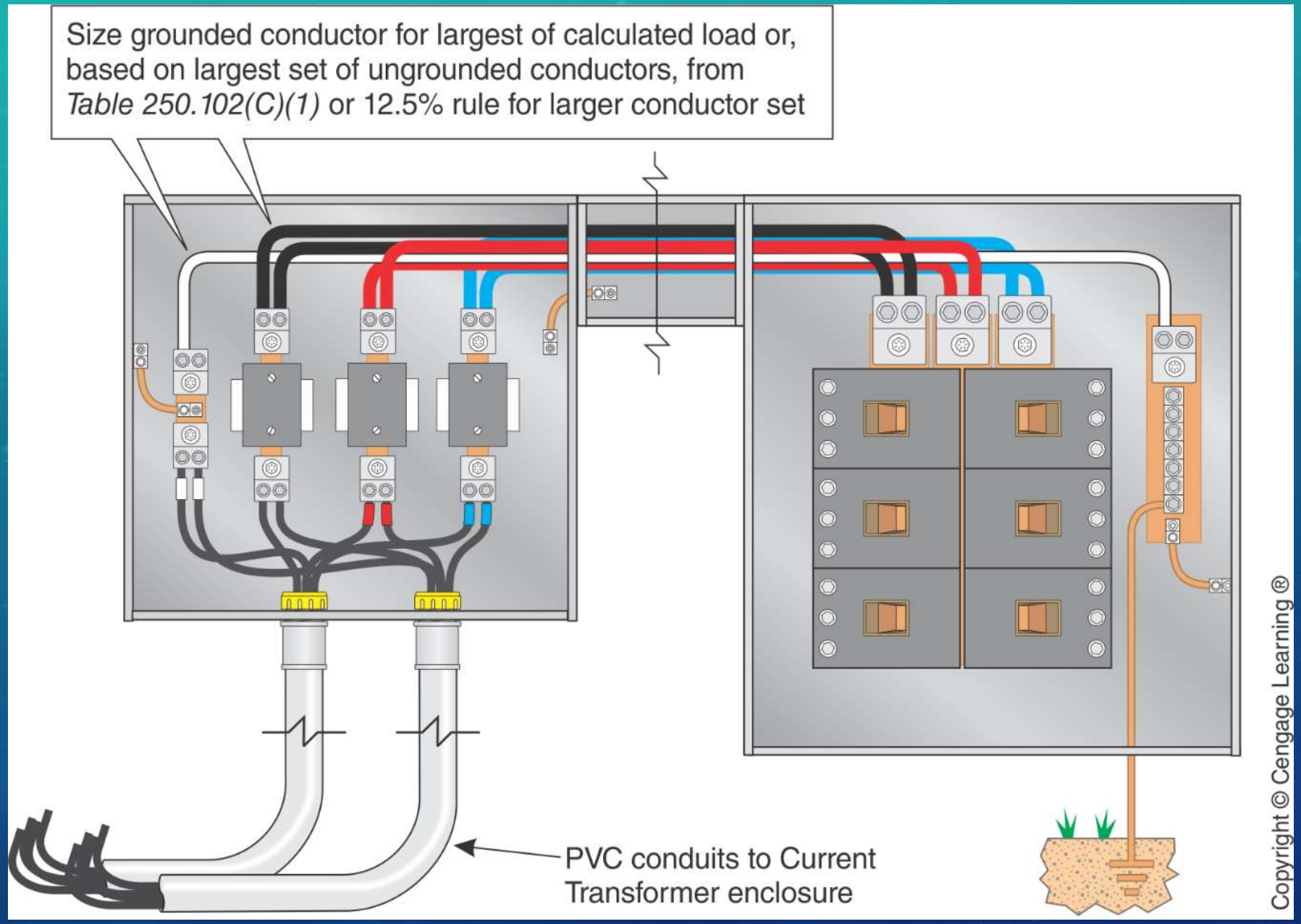

250.24(C)(2) Parallel Conductors in Two or More Raceways or Cables

- Applies where conductors are installed in parallel in two or more raceways or cables
- Grounded conductor in each raceway must be sized on the circular mil area of the ungrounded conductor in the raceway
- Minimum size of grounded conductor connected in parallel is 1/0 AWG
- *Table 250.102(C)(1)* to be used for sizing, other than for calculated load

Size of Parallel Grounded Service Conductor

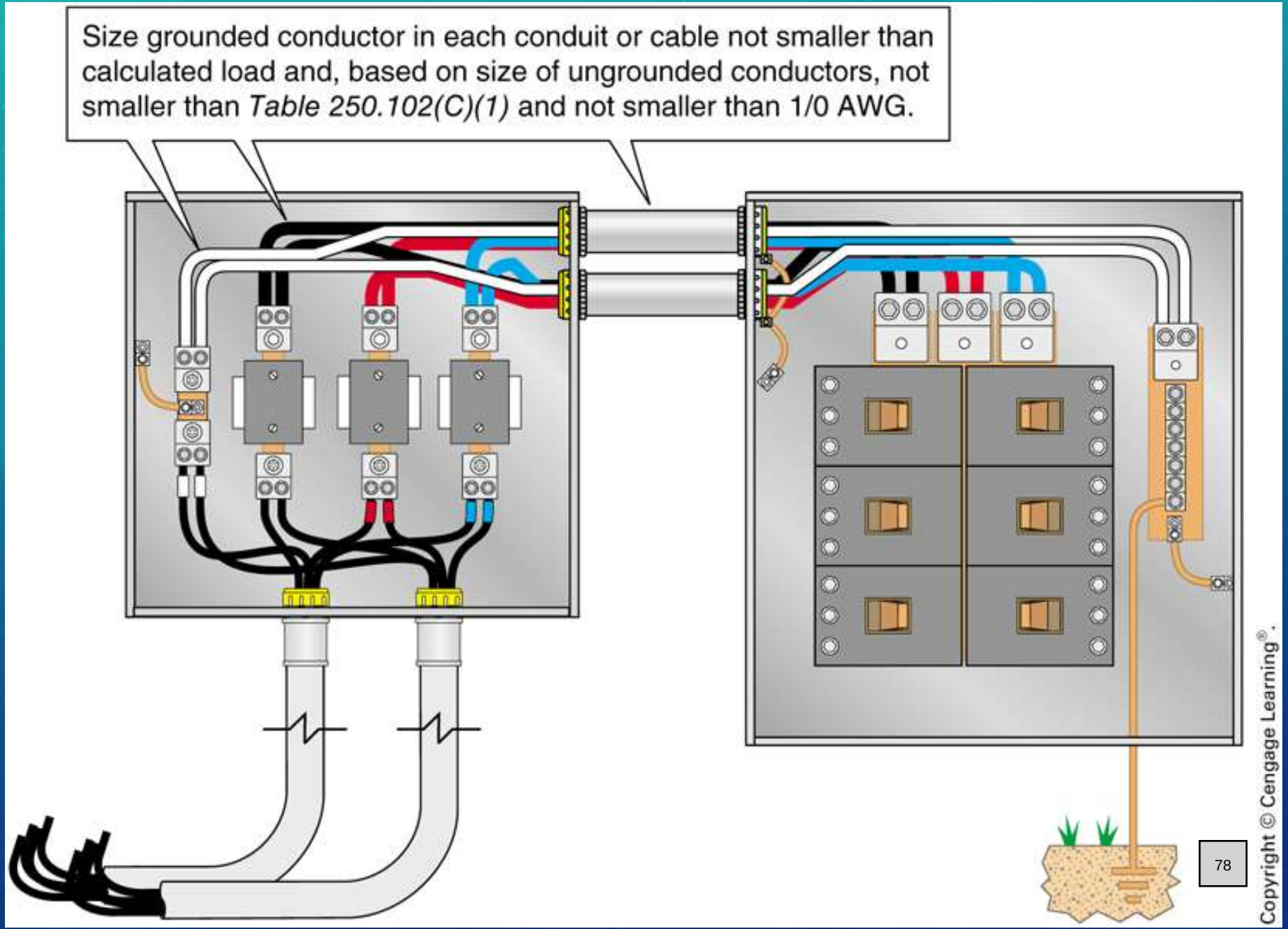

100: Separately Derived Systems (1 of 2)

- "An electrical source, other than a service, having no direct connection(s) to circuit conductors of any other electrical source other than those established by grounding and bonding connections"
- Power is derived from a source of electric energy or equipment other than a service
- No direct connection from circuit conductors of one system to circuit conductors of another system, other than connections established by grounding and bonding connections

250.28(D)(3) Separately Derived System with More Than One Enclosure (1 of 2)

- If a separately derived system supplies more than one enclosure, the system bonding jumper must be installed at either the source or first system disconnecting means
- If at the first disconnecting means, use main bonding jumper supplied for listed enclosure or size according to *250.28(D)(1)*
- If at the source, size system bonding jumper per *250.28(D)(1)* based on the sum of circular mil area of derived ungrounded conductors for one phase

Separately Derived Systems

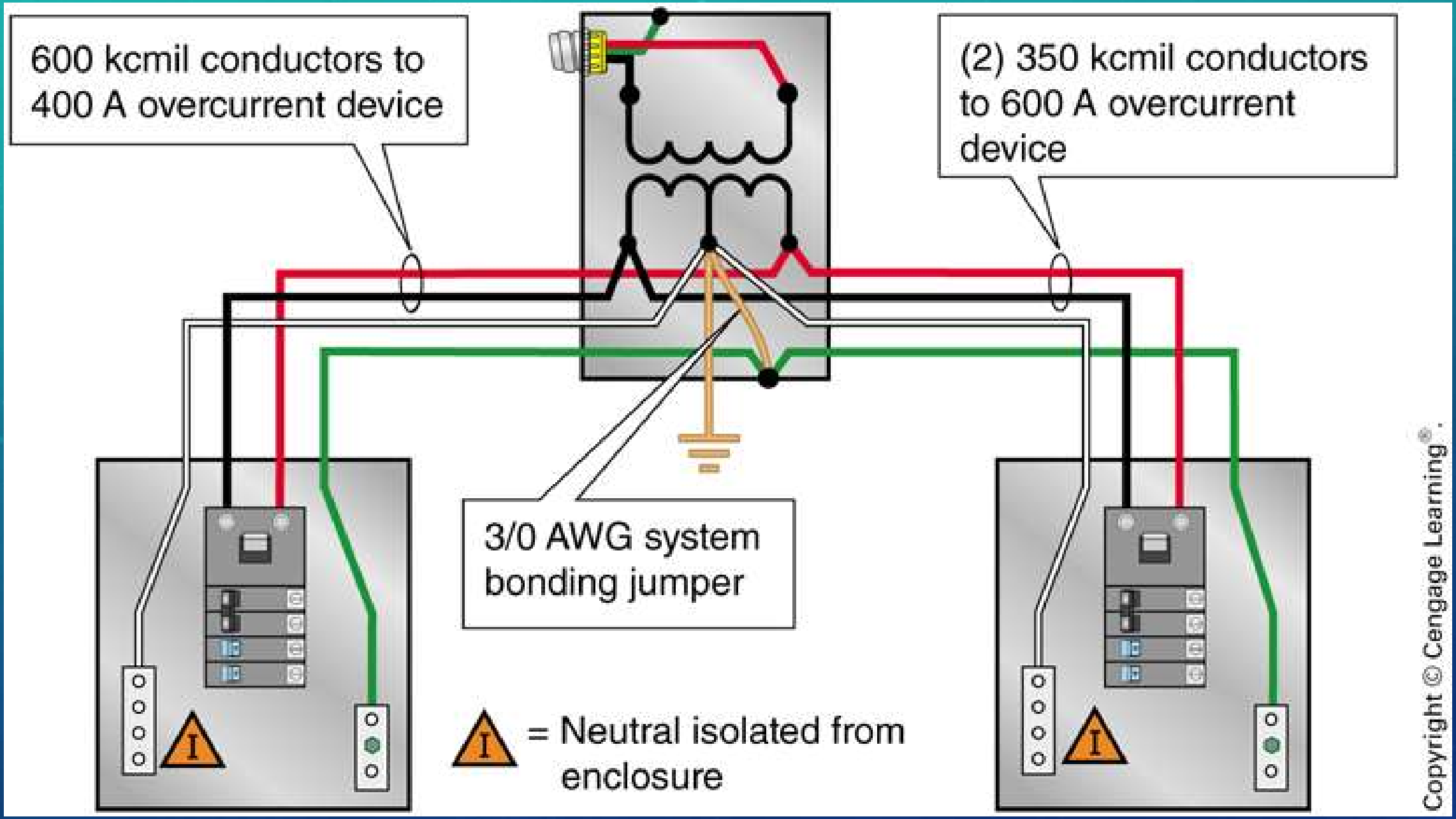

Transformer-type Separately Derived System

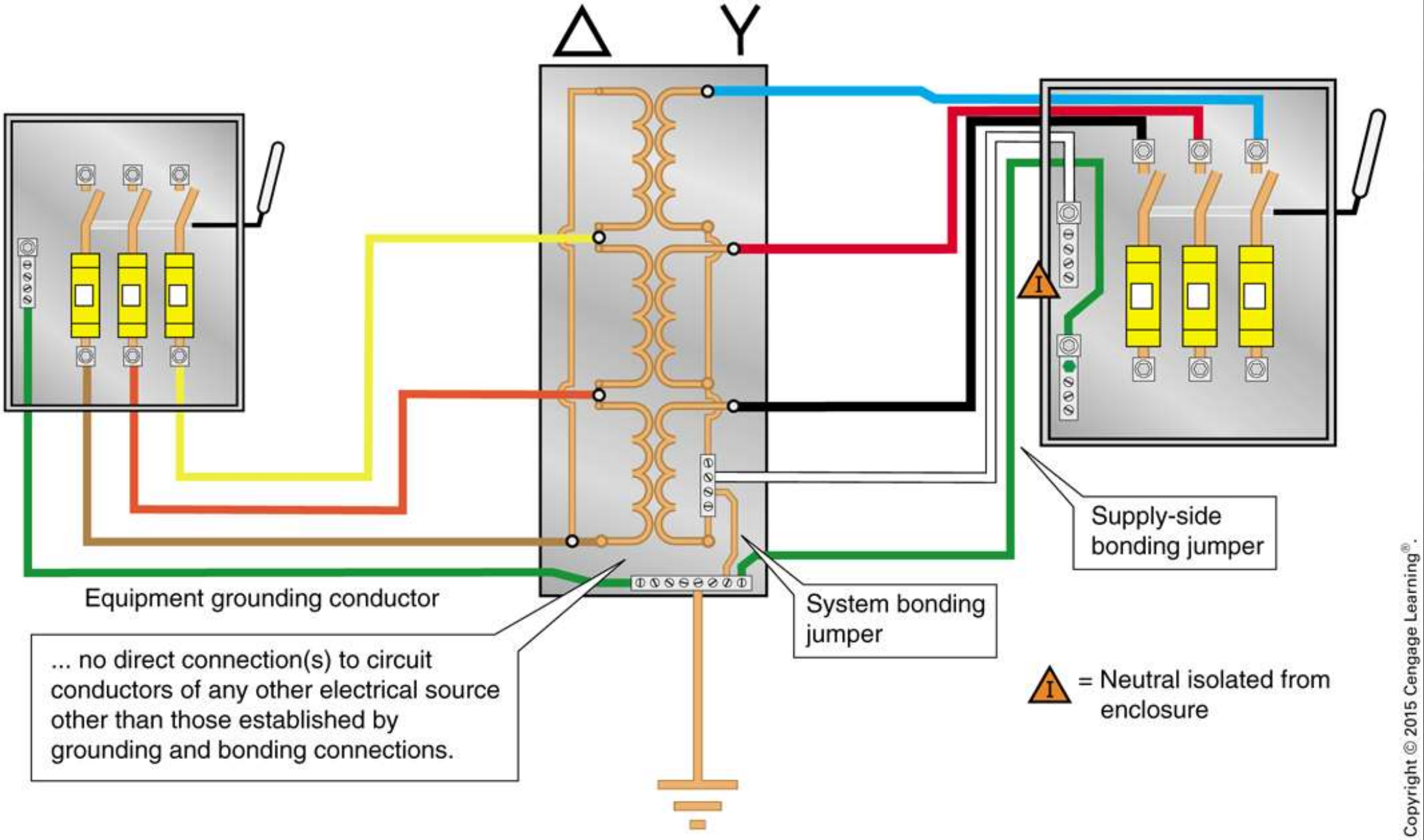

Here's How for Generators

- Look in the transfer switch
- If the neutral is switched, the system supplied is separately derived
- If the neutral is not switched, the system supplied is not separately derived
- No circuit exists for current to flow other than through the transfer switch

Generator-type Separately Derived System

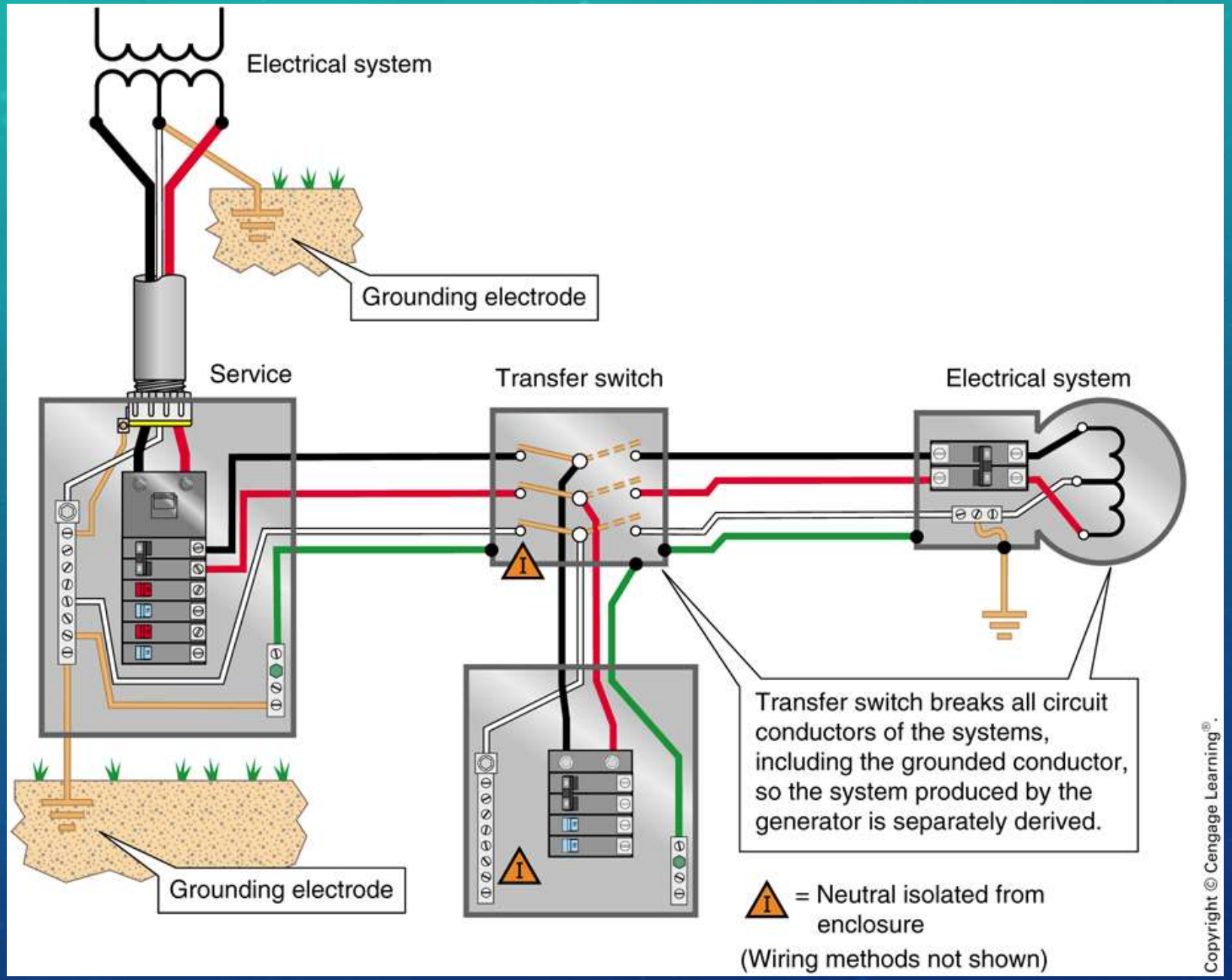

Supply-side Bonding Jumper
250.30(A)(2)

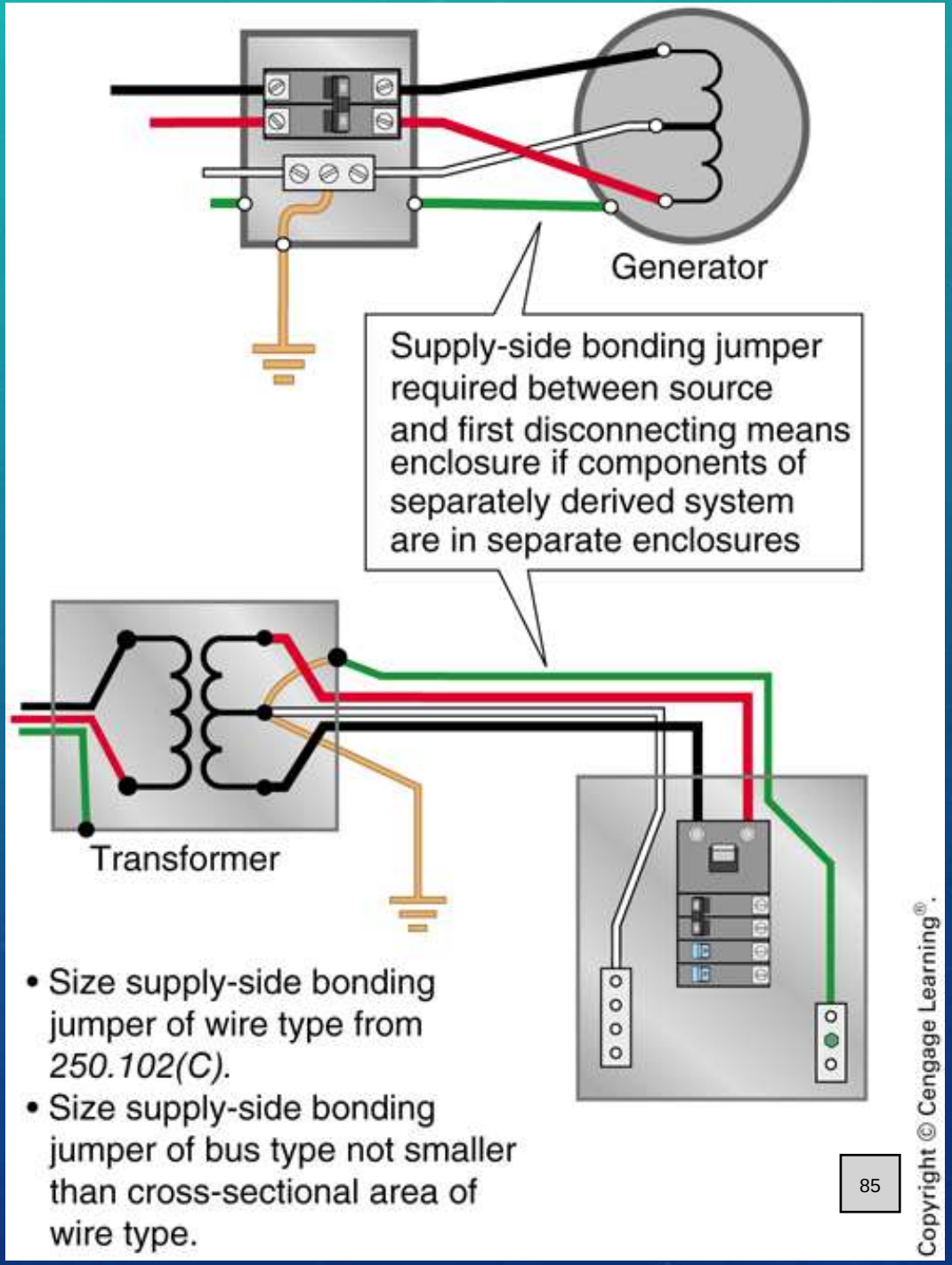

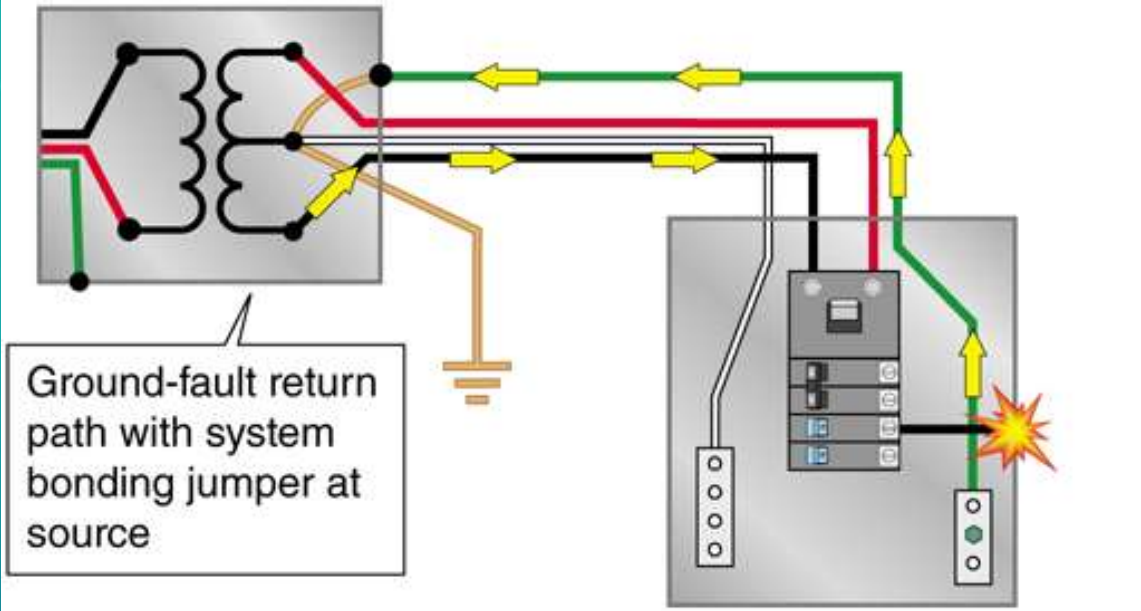

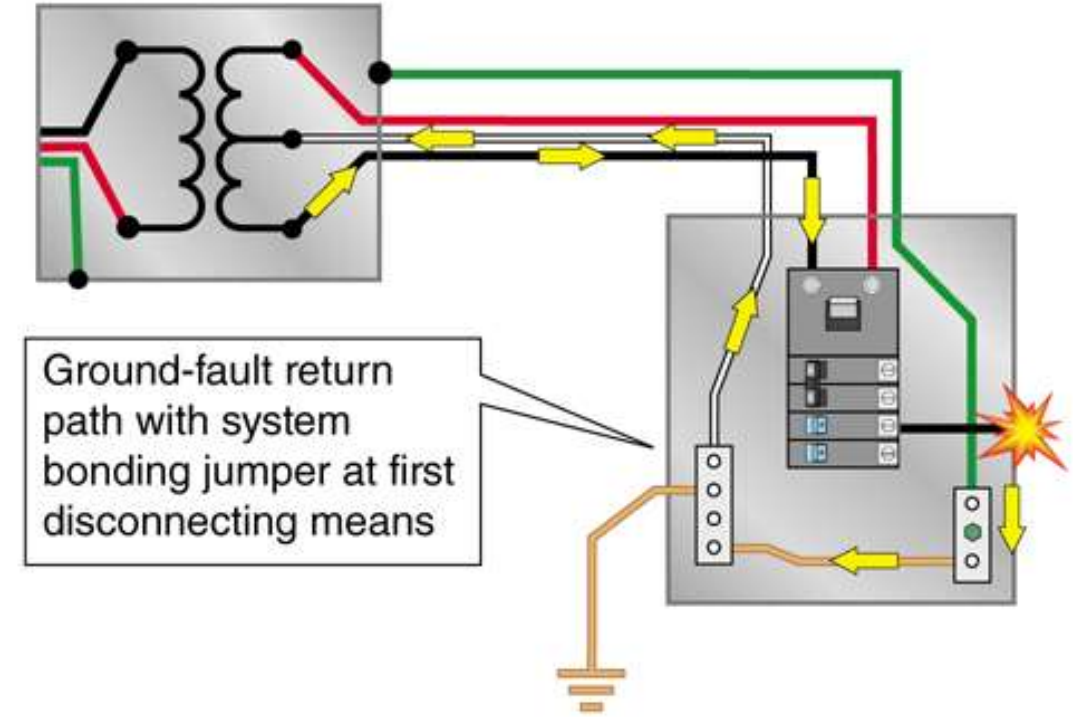

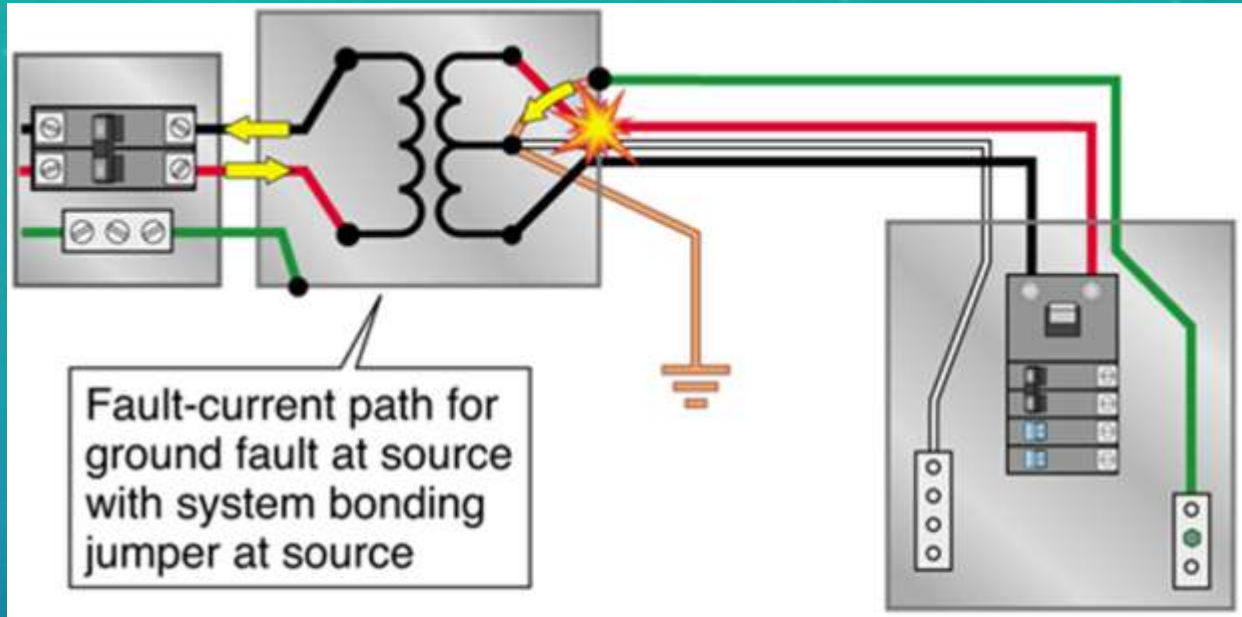

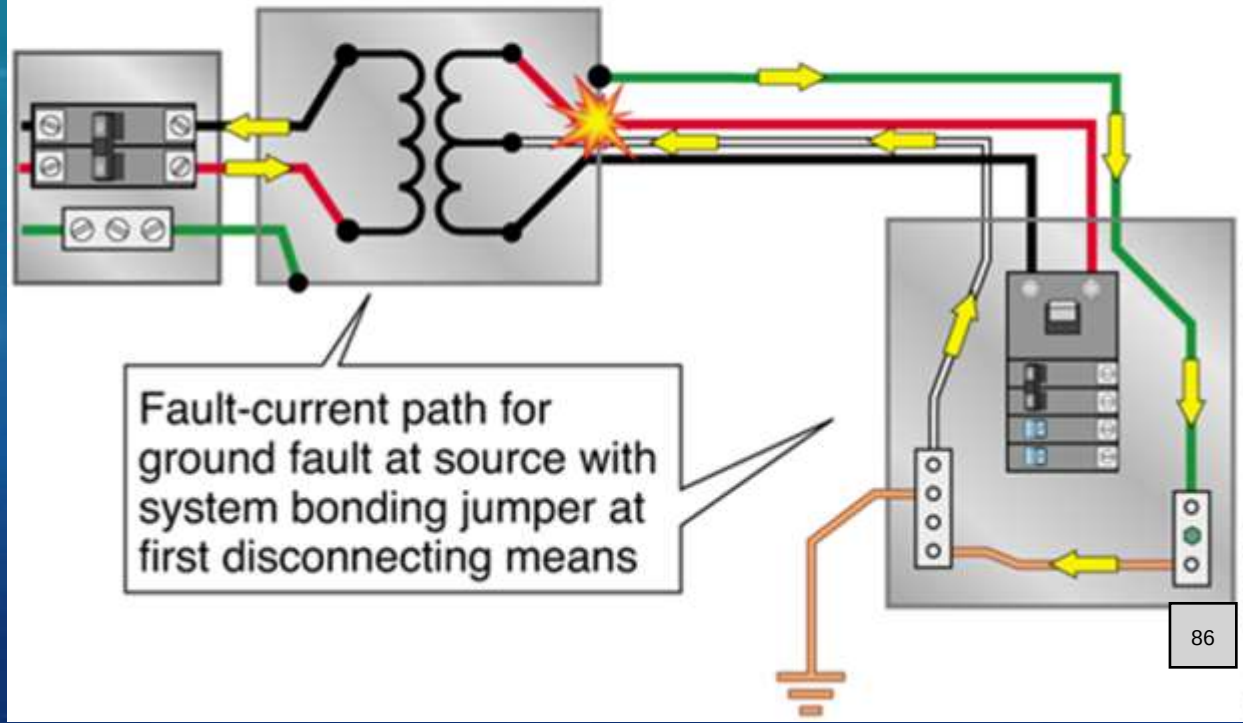

250.30(A)(3) Grounded Conductor

- *(A)(3)(a)* Rules identical to sizing grounded conductor for service
  - Ensures conductor is adequate for carrying fault current
  - Also, size for calculated load
- *(A)(3)(b)* Rules identical to sizing grounded conductors for services when installed in parallel
- *(A)(3)(c)* Rules identical to that for sizing the grounded conductor for a delta-connected service
- *(A)(3)(d)* Rules that are covered in *250.36* for high-impedance grounded neutral systems for those rated 480 to 1000 volts and in *250.187* for impedance grounded neutral systems rated over 1000 volts

Minimum size of grounded conductor to serve as ground-fault return path when system bonding jumper is not located at source, *250.30(A)(3)*.

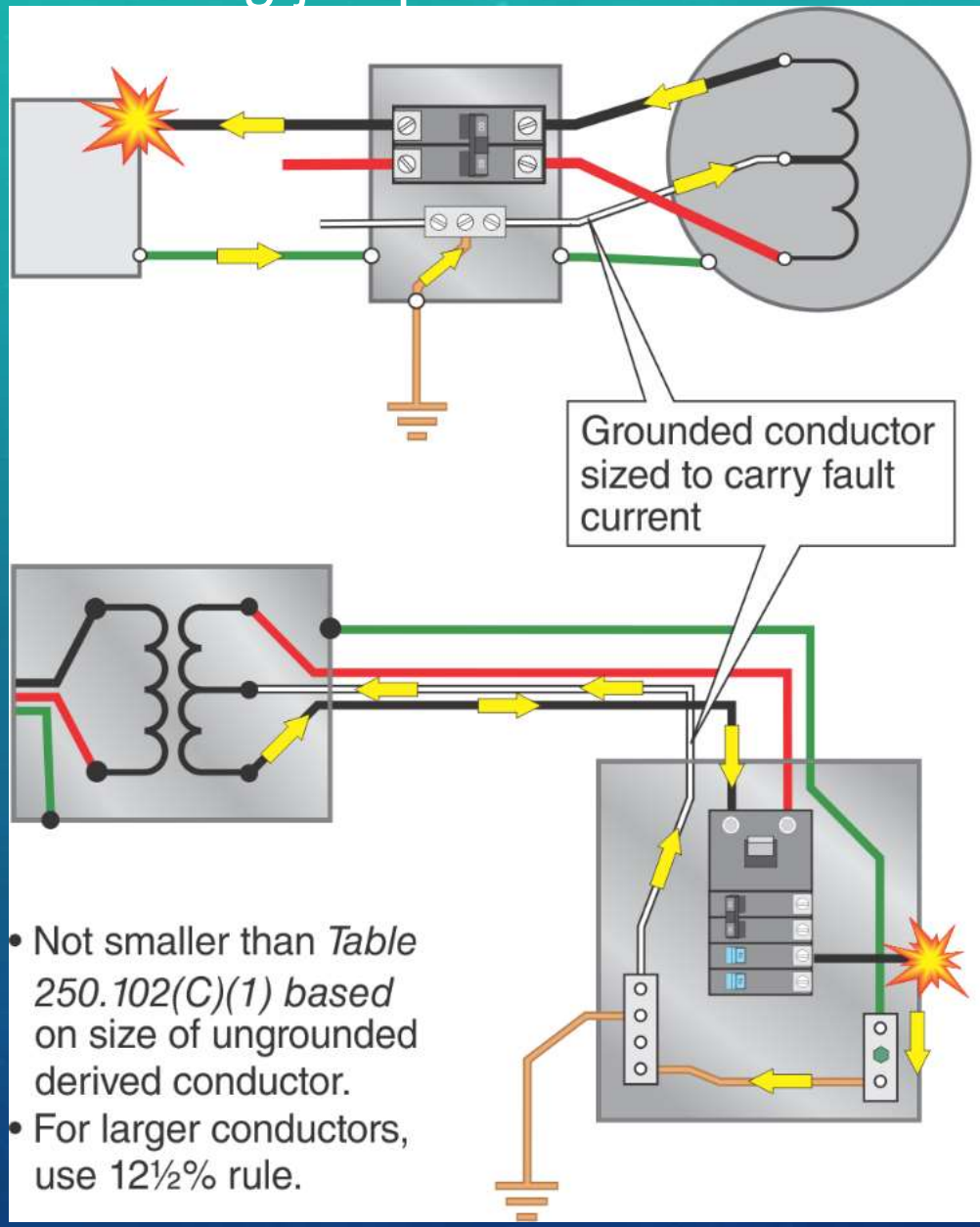

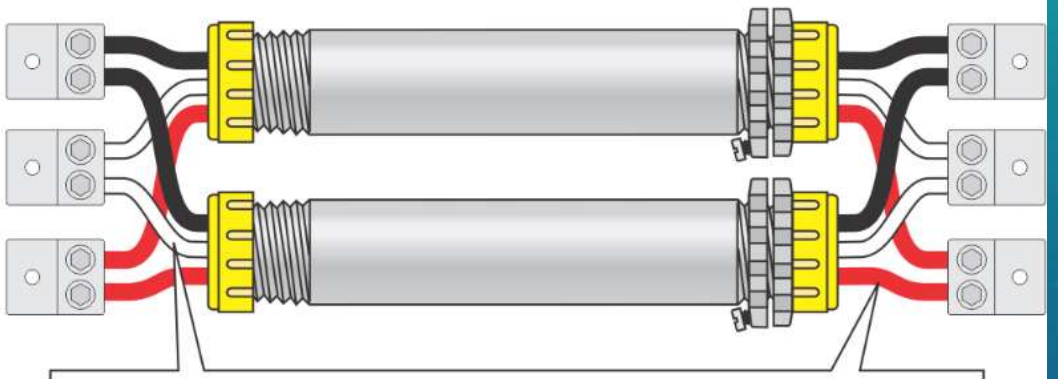

- For parallel conductor installations, a grounded conductor is required in each raceway or cable.
- The minimum size of the grounded conductor is determined from *Table 250.102(C)(1)* based on the size of the ungrounded conductor in the raceway or cable but not smaller than 1/0 AWG.
- For larger installations, apply the 12½% rule.

250.80 Service Raceways and Enclosures

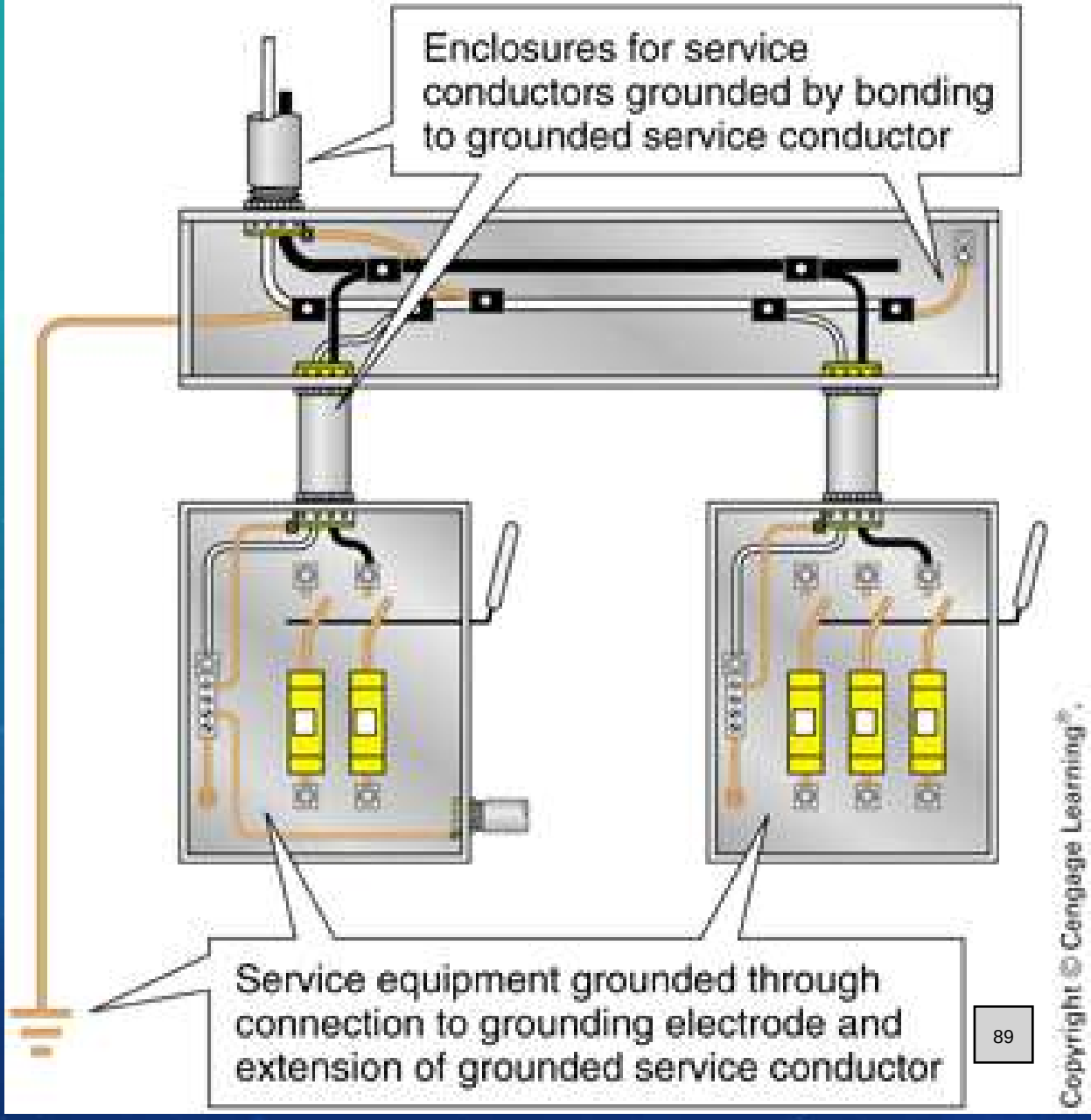

250.92(A) Bonding of Services

- Normally non-current-carrying metal parts of the following equipment must be bonded together:
  1. All service raceways, cable trays, cable bus framework, auxiliary gutters, or service cable armor or sheath except as permitted in *250.80*
  2. All enclosures containing service conductors, including meter fittings, boxes, or the like, interposed on the service raceway

Bonding service equipment enclosures, *250.92(A)*.

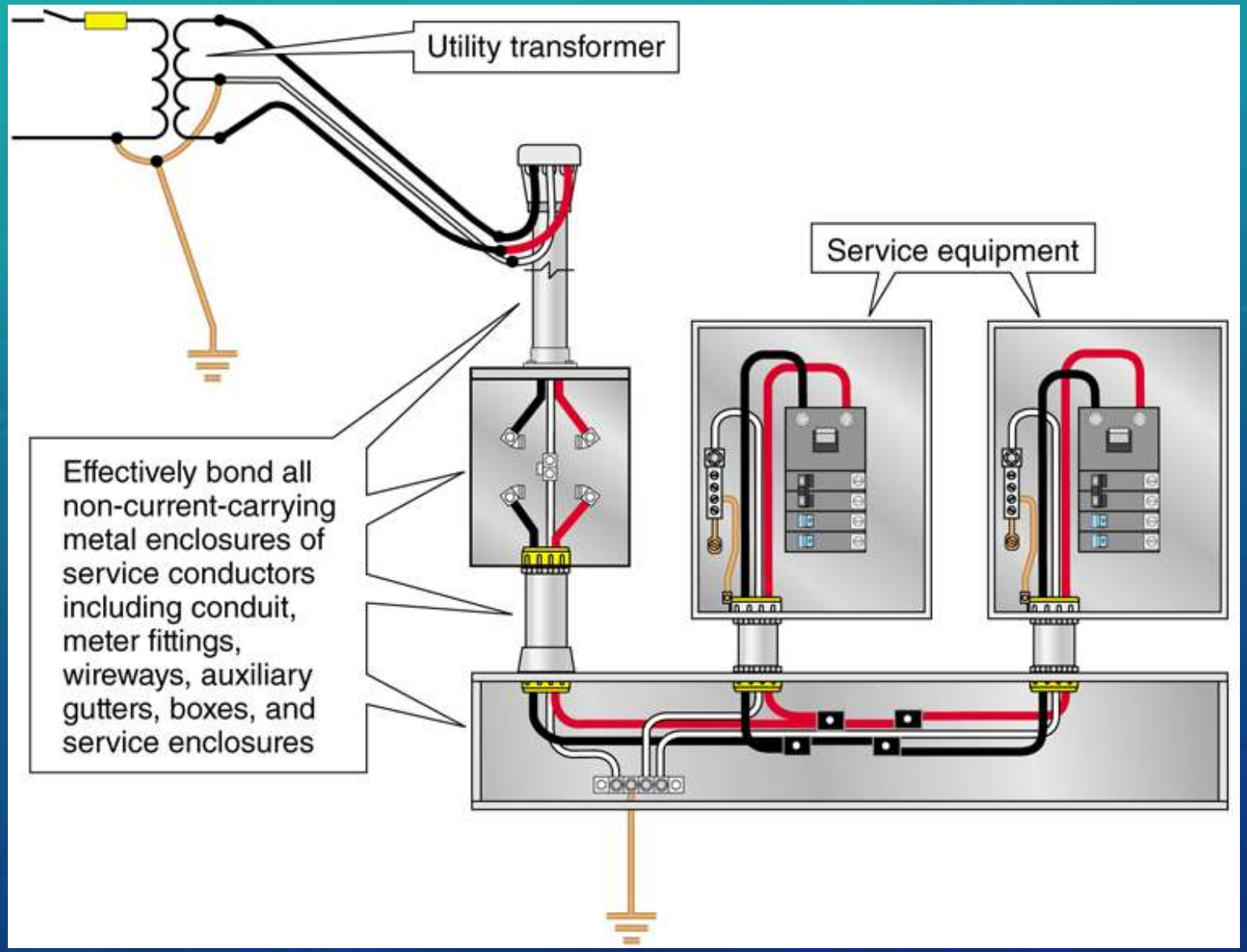

250.92(B) (2) Bonding Equipment to the Grounded Service

1. Bonding equipment to the grounded service conductor in a manner provided in *250.8* Bond meter base to service neutral, verify neutral terminal is bonded to the enclosure
2. Connection to grounding electrode may be required by the serving electrical utility
3. Connections utilizing threaded couplings or threaded hubs on enclosures if made up wrench tight
4. Weatherproof hubs, may be suitable for installation at service equipment
5. Thread less couplings and connectors where made up tight for metal raceways and metal-clad cable
6. Other listed devices such as bonding-type locknuts, bushings, or bushings with bonding jumpers

Use of neutral for bonding on supply side of service, *250.92(B)(1)*.

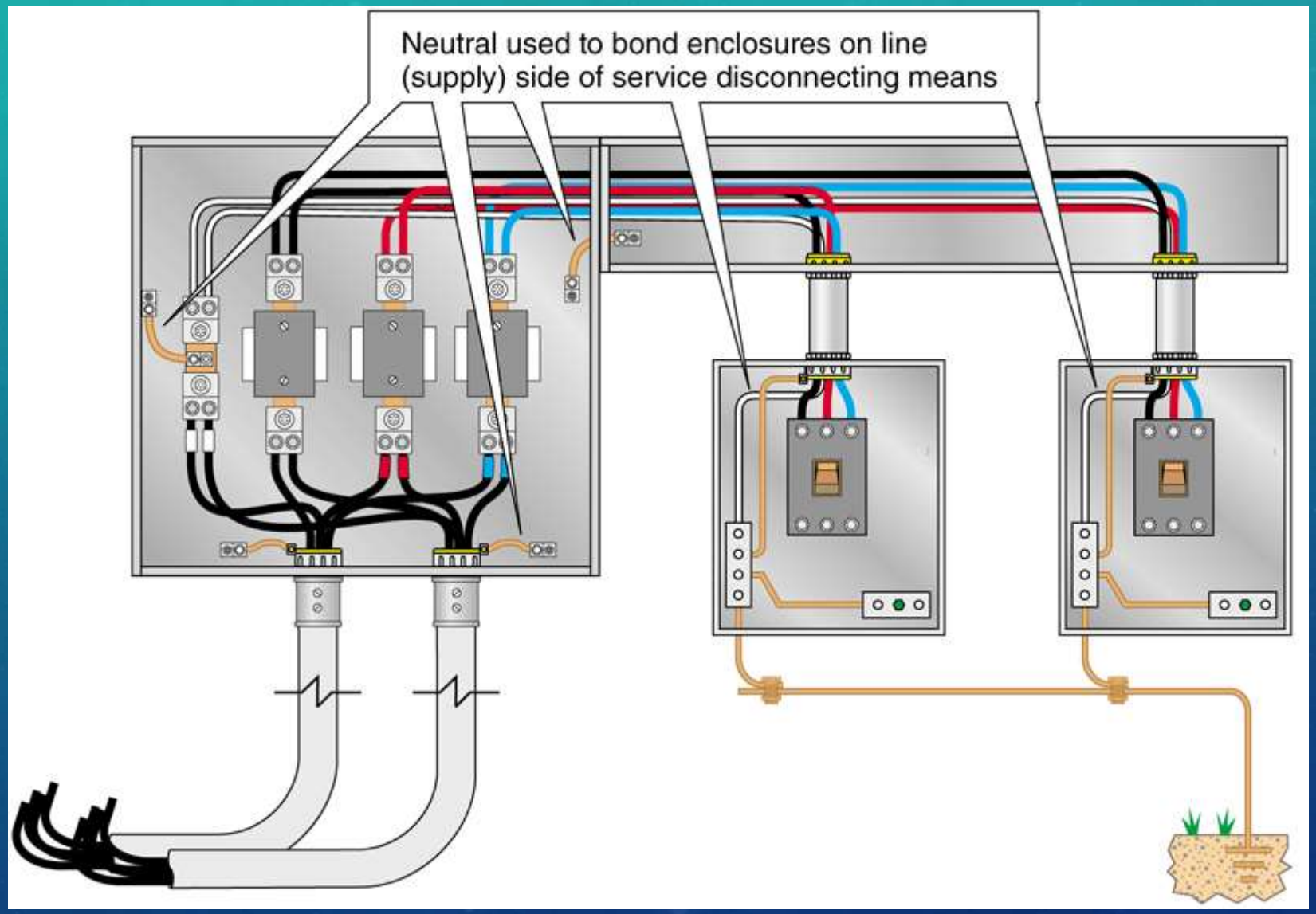

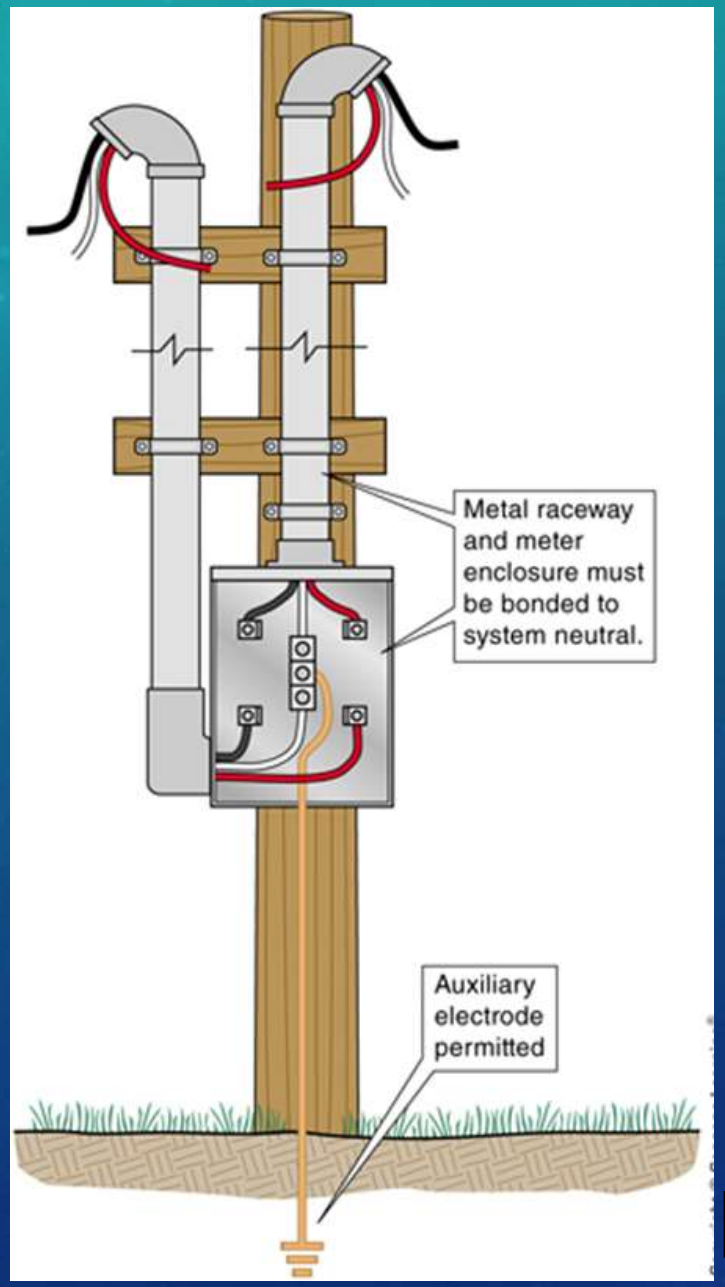

Bonding current transformer–type enclosures that are installed remote from and on the supply side of service equipment, *250.92(B)(1)*.

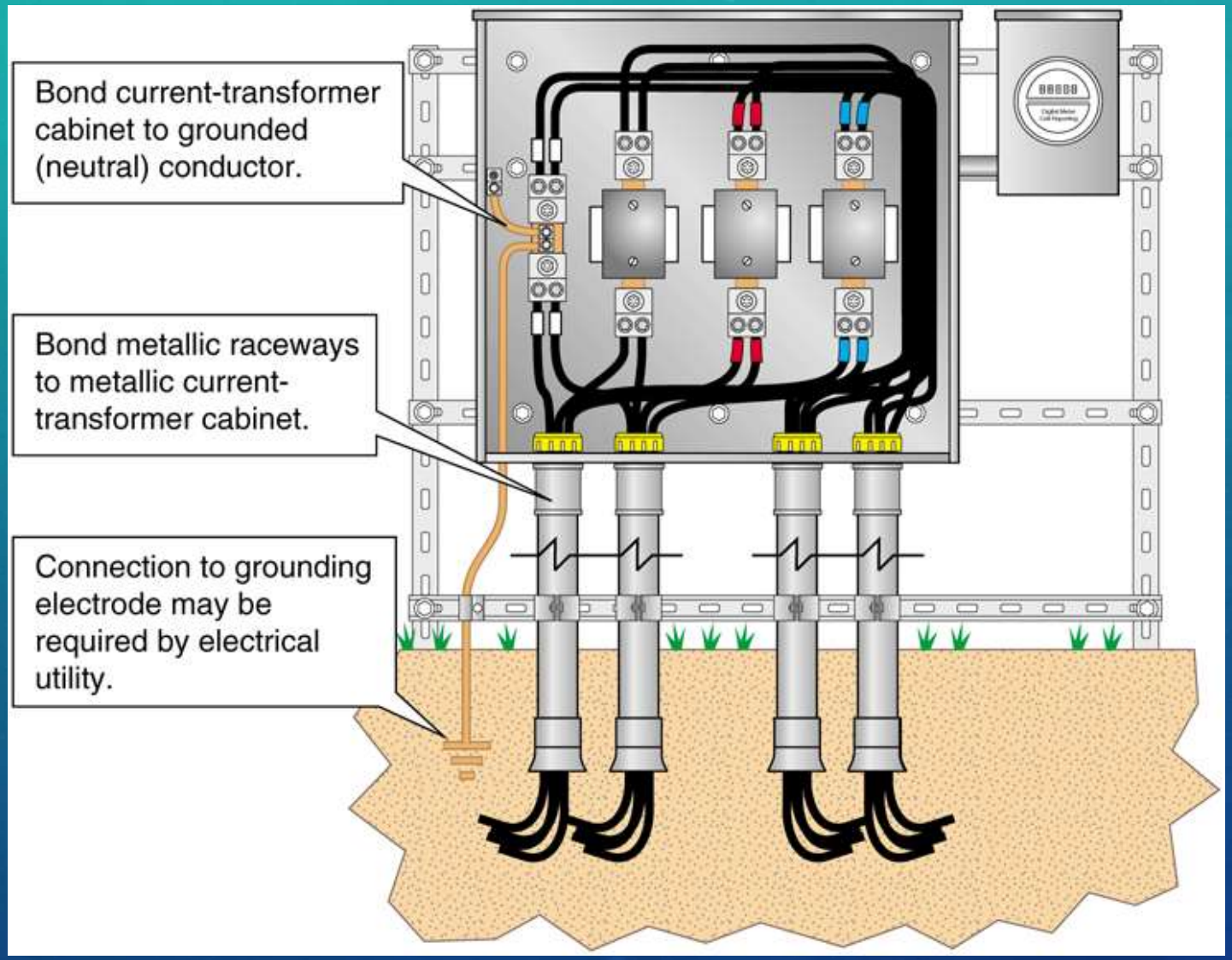

250.102(C)(1) Supply-Side Bonding Jumper in a Single Raceway or Cable

- Size according to *Table 250.102(C)(1)* based on size of the supply conductor
- For larger conductors than in the table, size not smaller than 12½ percent of largest phase conductor total circular mill

250.102(C)(1) Supply-side bonding jumper on supply side of OCP

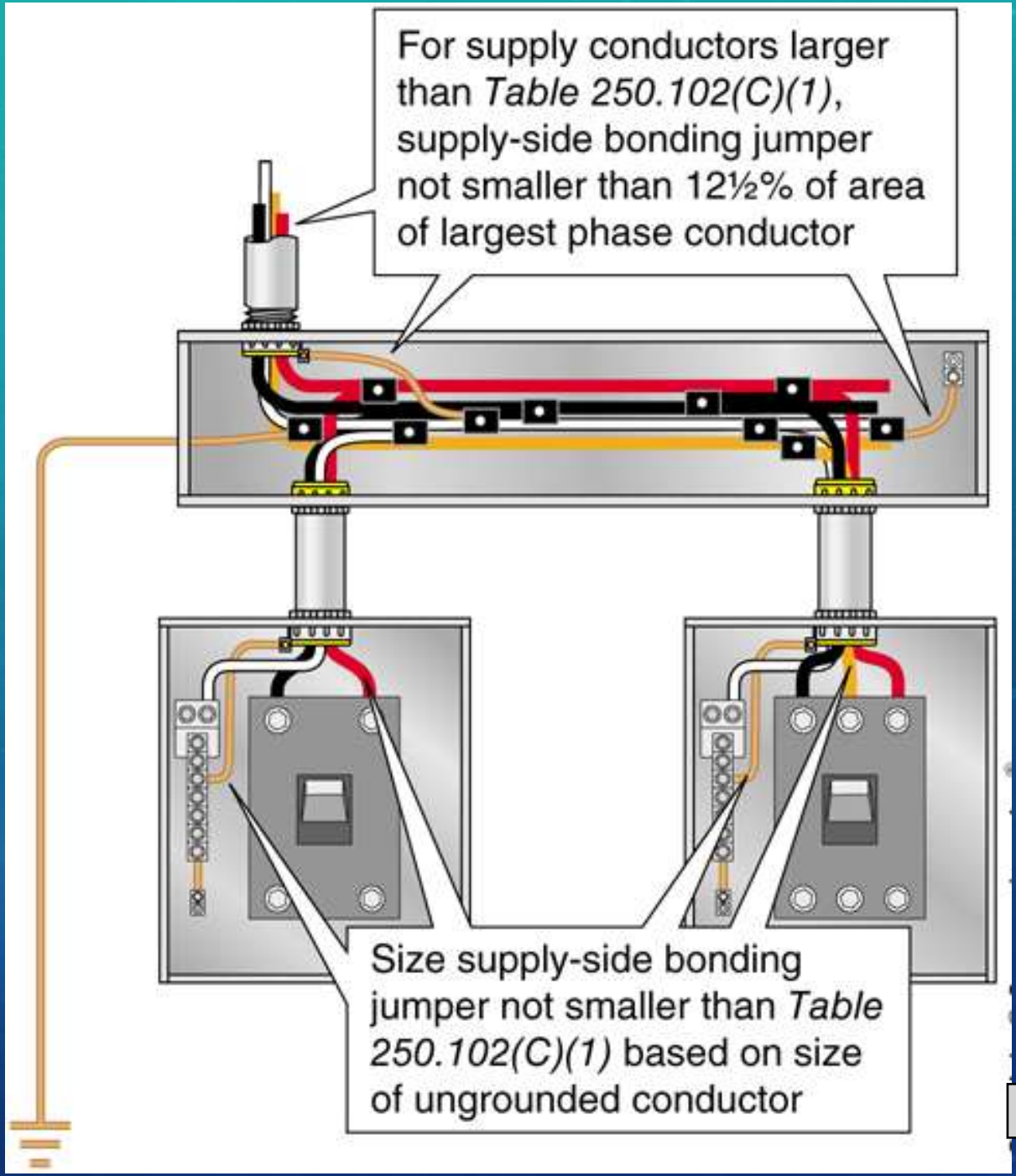

250.104(A)(2) Buildings of Multiple Occupancy

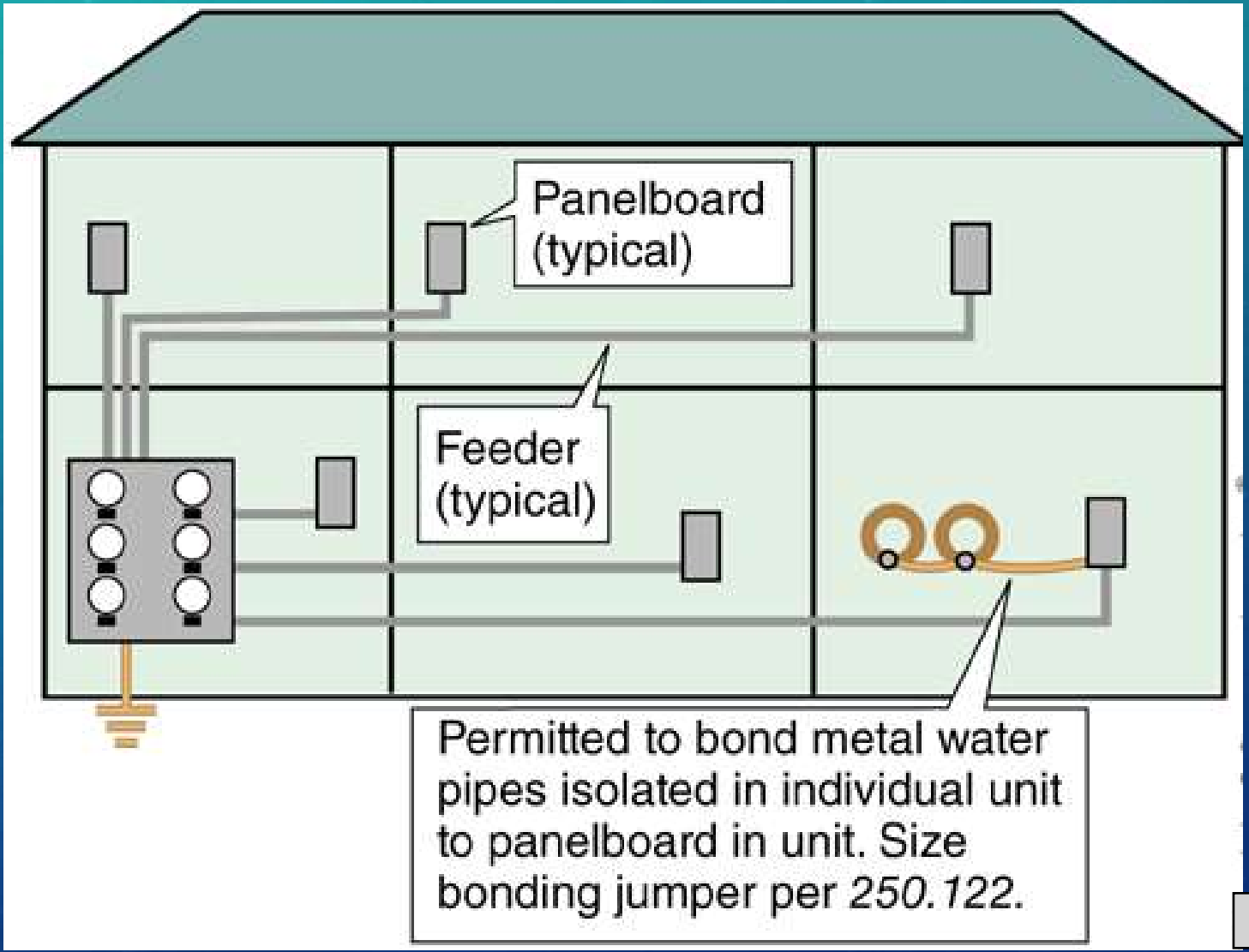

Questions?

File Attachments for Item:

ER-2 NEC Round Table (Greater Cincinnati Electrical Association)

ESI, BO, EPE, RBO, RPE (4 hours)

Staff Notes: These monthly round table meetings were approved for 2020, when they focused on the 2017 NEC. They now include the 2020 NEC as well.

ESIAC Recommendation:

Committee Recommendation:

APPLICATION

FOR

Continuing Education Course Approval

Continuing education programs approved for education credit by the Ohio Board of Building Standards may be used for compliance with certification requirements related to code enforcement, plan review, and inspection responsibilities. The credit is to be used to renew the certifications issued by the Ohio Board of Building Standards pursuant to section 3781.10(E) ORC.

Board of Building Standards
6606 Tussing Road, P.O. Box 4009
Reynoldsburg, Ohio 43068-9009
(614) 644-2613 Fax: (614) 644-3147
dic.bbs@com.state.oh.us
www.com.state.oh.us/dic/dicbbs.htm

COURSE SUBMITTER:

Course Submitter: TERRENCE J. EIFEL (Contact Name)

Organization: GREATER CINCINNATI ELECTRICAL ASSN. (Organization/Company)

Address: PO BOX 18643 (Include Room Number, Suite, etc.)

City: ERLANGER State: KY Zip: 41018

E-Mail: GCEA01@FUSE.NET

Telephone: 859-512-5244 Fax: 859-283-1877

Course Sponsor: GCEA

COURSE INFORMATION:

Course Title: ~~MONTHLY SEMINARS/MEETINGS~~ NEC Rows Table

New Course Submittal: ☐ , Update Course: ☐ Prior Approval Number:

Purpose and Objective: OVERVIEW & UNDERSTANDING OF SUBJECT NEC ARTICLES

1 - NEC ARTICLES 320-398 (SEPT 20, 2021) BBS2020-089
2 - NEC ARTICLES 230 & 240 (OCT 18, 2021) BBS2019-202
3 - NEC ARTICLE 250' (NOV 15, 2021) BBS2020-081
4 - NEC ARTICLES 220 & 225 (DEC 13, 2021) BBS 2020-083

Number of Instructional Contact Hours that can be obtained upon completion: 4 — 1.0 HOURS CLASSES

If Multi-Session, Number of Instructional Contact Hours Per Session: 4 SEPARATE 1.0 HOUR CLASSES

Program Applicable for the Following Participants:

Building Official ☐ Master Plans Examiner ☐ Building Inspector ☐ Fire Protection Inspector ☐ Mechanical Inspector ☐
Building Plans Exam. ☐ Plumbing Inspector ☐
Plumbing Plans Exam. ☐ Non-Res IU Inspector ☐
Electrical Plans Exam. ☒
Mechanical Plans Exam. ☐
Fire Protect. Plans Exam. ☐

Res Building Official ☐ Res Plans Examiner ☒ Res Building Inspector ☐ Res Mechanical Inspector ☐ Res IU Inspector ☐

Electrical Safety Inspectors ☒

Location of ESI Course: SHARONVILLE, OH

Date(s) of ESI Course(s): SEPT 20, 2021 OCT 18, 2021 NOV 15, 2021 DEC 13, 2021

SUBMITTAL CHECKLIST: **Make Sure** all of the Following Information is **Submitted**		Check Off
Course Submitter:	Name of contact person and their certification numbers, organization, address, fax, phone	✓
	Organization sponsoring or requesting the program (if any)	✓
Course Title:	Name of course (related to content)	✓
Purpose/Objective:	Describe purpose and how course will improve competency of certification(s) listed	✓
Contact Hours:	Indicate instructional time and credit requested in hours (e.g.: 0.5 hr, 1 hr, 3.5 hrs)	✓
Participants:	Check off each certification for which credit is requested (for which course relates to certification)	✓
Content of Program:	Include collated agenda, time schedule, course outline; list specific sections of code, references, and topics covered	✓
Course Materials:	Collated workbooks, handouts, hard copy or electronic versions of program is available	✓
Instructor(s) Info.:	Resume of professional/educational qualifications & teaching/training experience/BBS certifications	✓
Test Materials:		N/A
Completed Application:		✓

NOTE: The Board does NOT grant retroactive approval for courses presented prior to approval date.

Form 1326

BBS 8/02/8130

Training Facility:

The seminars will be held at the Scarlet Oaks Career Development Campus at 303 Scarlet Oaks Drive, Sharonville, OH 45241

Scarlet Oaks is one of several campuses of the Great Oaks Career Development Centers. These education seminars will be held in a modern classroom setup. The room is set up to comfortably accommodate seating for 40.

Modern audio/visual equipment (computer, projector, microphone and speaker system) is available for the instructor's use. Vending machines for drinks and snacks are nearby and available. There are both men's and women's restrooms nearby.

Course Materials:

Every attendee is responsible for bringing a "NEC 2017" and a "NEC 2020" code book and a notebook. The instructor will have the PowerPoint slides associated with the topic when they help support the topic. The instructor will provide each attendee with a summary of main points, outline, and other topic associated examples, such as, calculations and FAQs.

GCEA'S 2021 "NEC" BBS MONTHLY TRAINING DATES & TOPICS SCHEDULE

With previous BBS approval class number and year

Seminars: 1.0 Hour NEC Code

Date	Description	Instructor
September 20, 2021	NEC – Articles 320 – 398 Wiring Methods and Materials **# BBS2020-089 (BO, EPE, ESI, RBO, RPE)**	Dennis Weneck Alt. Mario Mumfrey
October 18, 2021	NEC–Article 230 &240 Services and Overcurrent Protection **# BBS2019-202 (BO, EPE, ESI, RBO, RPE)**	Dennis Weneck Alt. Mario Mumfrey
November 15, 2021	NEC Article 250 Grounding and Bonding **# BBS2020-081 (BO, EPE, ESI, RBO, RPE)**	Dennis Weneck Alt. Mario Mumfrey
December 13, 2021	NEC – Articles 320 – 398 Wiring Methods and Materials **# BBS2020-083 (BO, EPE, ESI, RBO, RPE)**	Dennis Weneck Alt. Mario Mumfrey

"NEC Articles 320 – 398, Wiring Methods and Materials"

Article 320 - Armored Cable:

Article 322 - Flat Cable Assemblies: Type FC

Article 324 - Flat Conductor Cable: Type FCC

Article 332 - Mineral Insulated, Mineral Shielded Cable

Article 334 - Nonmetallic-Shielded Cable: Types NM, NMC, and NMS

Article 338 - Service-Entance

Article 342 - Intermediate Metal Conduit: Type IMC

Article 344 - Rigid Metal Conduit: Type RMC

Article 352 - Rigid Polyvinyl Chloride Conduit: Type PVC

Article 358 - Electric Metallic Tubing: Type EMT

Article 370 - Cablebus

Article 376 - Metal Wireways

Article 378 - Nonmetalic Wireways

Article 392 - Cable Trays

Article 398 - Open Wire on Insulators

"NEC Article 230 & 240"

Services and Overcurrent Protection

Article 230 - SERVICES:

I Service Distribution General Requirements

A. Listed Equipment (SUSE Rated)

B. Definitions – Services – Buildings - Structures Circuit conductor to be grounded on grounded system

C. Clearances

II Service Installation

A. Service drop conductors and laterals

B. Location (nearest point for disconnect)

C. Service grounding and bonding sizing

III Service Load Calculations

A. Article 220 – Branch circuits, Feeders & Services

B. Residential Load Summary requirement for 1, 2, & 3 Family Units

C. Plan review requirements for Multi-families & Commercial spaces

November 15, 2021 GCEA Course Outline

" NEC – Article 250, Grounding and Bonding"

Instructor: Dennis Weneck, ESI

A. Scope - Article 250.1

B. Definitions - Article 250.2

C. Grounded Systems - Article 250.4A

D. Ungrounded Systems - Article 250.4B

E. Connection of Grounding & Bonding Equipment - Article 250.8

F. AC Systems to be Grounded - Article 250.20

G. AC Systems not required to be Grounded - Article 250.21

H. Grounding Service Supplied AC Systems - Article 250.24

T. Conductor to be Grounded - AC Systems - Article 250.26

J. Main Bonding and System Bonding Junipers - Article 250.28

K. Buildings or Structures Supplied by Feeders or Branch Circuits Article 250.32

L. Grounding Electrodes - Article 250.52

M. Grounding Electrode System Installation - Article 250.53

N. Grounding Electrode Conductor Installation - Article 250.64

O. Size of AC Grounding Electrode Conductor - Article 250.66

P. Grounding Electrode Conductor and Bonding Jumper Connection to the Grounding Electrode - Article 250.68

December 13, 2021 GCEA Course Outline

"NEC Articles 220 & 225,

Branch Circuits, Feeders and Service Load Calculations"

Branch Circuit, Feeder and Service Calculations

I General Article 220

II Branch Circuit Load Calculations

1) General Lighting Loads
2) Other Load: Appliances, Dryers, cooking, luminaries, receptacle outlets … etc
3) Loads for additions to existing installations

III Feeder and Service Load Calculations

1) General lighting
2) Receptacle load other than dwelling units
3) Other load: Small appliances, laundry, ranges and cooking appliances….etc.
4) Feeder or Service neutral load

IV Optional Feeder and Service Load Calculations.

1) Dwelling units
2) Existing dwelling units
3) Multifamily dwellings
4) Determining existing load

Outside Branch Circuits and Feeders

I General - Article 225

II Conductor size and support Article 225.6

III Lighting equipment installed outdoors Article 225.7

IV Open-Conductor Spacings Article 225.14

V Clearances for Overhead Conductors and Cables - Article 225.18

VI Clearances from bldgs for conds. of not over 600v. - Article 225.19

VI Maximum number of disconnects – Article 225.33

VII Grouping of disconnects – Article 225.34

INSTRUCTORS

Dennis Weneck (ESI #1614) is the scheduled instructor for each seminar. In the event of Dennis Weneck not being available at any session, the backup instructor will be Mario Mumfrey.

(Resumes are attached.)

Instructor Qualifications:

Dennis Weneck – ESI# 1614

Dennis Weneck has been in the electrical industry for 36 years. He received his Certification # 1614 from the State of Ohio in 1989. He has been employed by Inspection Bureau, Inc. (IBI) for 24 years as an Electrical Safety Inspector. Dennis has taught approved O.C.I.L.B. electrical code classes for the Greater Cincinnati Electrical Association over the past eight years. Dennis is currently inspecting in IBI's C-2 territory.

Address: Suite 125-W, 250 West Court Street, Cincinnati, OH 45202
Telephone Number: 513-381-6080

Mario Mumfrey – ESI #1196

Mario Mumfrey has been in the electrical industry for 43 years. He recieved his Certification #1196 from the state of Ohio in 1989.

Mario has been employed by the Inspection Bureau, Inc (IBI) for 16 years as an Electrical Safety Inspector. He is currently inspecting in IBI's R-1 territory.

He is recognized by his peer inspectors as being the exceptionally knowledgeable in the NEC's, Article 680, swimming pools, spas, and fountain installations.

Address: Suite 125-W, 250 West Court Street, Cincinnati, OH 45202
Telephone Number: 513-381-6080

File Attachments for Item:

ER-3 Voltage Drop Prevention (Ohio Certificate Renewal)

ESI, BO, MPE, BPE, EPE, BI, FPI, NRIUI, RBO, RPE, RBI, RIUI (4 hours)

Staff Notes: 2020 NEC

ESIAC Recommendation:

Committee Recommendation:

APPLICATION

FOR

Continuing Education Course Approval

Continuing education programs approved for education credit by the Ohio Board of Building Standards may be used for compliance with certification requirements related to code enforcement, plan review, and inspection responsibilities. The credit is to be used to renew the certifications issued by the Ohio Board of Building Standards pursuant to section 3781.10(E) ORC.

Board of Building Standards
6606 Tussing Road, P.O. Box 4009
Reynoldsburg, Ohio 43068-9009
(614) 644-2613 Fax: (614) 644-3147
dic.bbs@com.state.oh.us
www.com.state.oh.us/dic/dicbbs.htm

COURSE SUBMITTER: OHIO CERTIFICATE RENEWAL (OCR)

Course Submitter: HAROLD PLANT (by MAYDA SANCHEZ SHINGLER)
(Contact Name)

Organization: OHIO CERTIFICATE RENEWAL (aka OCR)
(Organization/Company)

Address: P. O. BOX 211102
(Include Room Number, Suite, etc.)

City: COLUMBUS State: OHIO Zip: 43221-1102

E-Mail: halplant2112@outlook.com / mayda@ohiocertificate.com

Telephone: (614)451-9003 Fax: ALT MOBILE 614.395.9689

Course Sponsor: OHIO CERTIFICATE RENEWAL

COURSE INFORMATION:

Course Title: Voltage Drop Prevention (4)

New Course Submittal: ■ Update Course: ☐ Prior Approval Number: _____

Purpose and Objective: INSTRUCTOR (J.D. WHITE / ALT - R J SCHUTZ / ALT Sam Cronk) DIRECTED SEMINAR UTILIZING POWER POINT EITHER FROM CLASSROOM PLATFORM FOR ON-SITE PARTICIPANTS OR REMOTE INSTRUCTION VIA INTERNET E-LEARNING PLATFORM RELATING ELECTRICAL SYSTEMS DESIGN, INSTALLATION AND INSPECTION PRACTICES BY DIRECT REFERENCE TO THE LATEST EDITIONS OF THE OHIO BUILDING CODE (OBC) AND NFPA STANDARD 70 - THE NATIONAL ELECTRICAL CODE (NEC - 2020). Participants learn how to design feeders and branch circuits to minimize Voltage Drop.

Number of Instructional Contact Hours that can be obtained upon completion: 4.0

If Multi-Session, Number of Instructional Contact Hours Per Session: n/a

Program Applicable for the Following Participants:

Building Official ■ Master Plans Examiner ■ Building Inspector ■ Fire Protection Inspector ■ Mechanical Inspector ☐
Building Plans Exam. ✔ Plumbing Inspector ☐
Plumbing Plans Exam. ☐ Non-Res IU Inspector ■
Electrical Plans Exam. ■
Mechanical Plans Exam. ☐
Fire Protect. Plans Exam. ☐

Res Building Official ■ Res Plans Examiner ■ Res Building Inspector ■ Res Mechanical Inspector ☐ Res IU Inspector ■

Electrical Safety Inspectors ☐
Location of ESI Course: OCR Classroom / Interactive Webinar Date(s) of ESI Course(s): 12/3/2021

SUBMITTAL CHECKLIST: **Make Sure** all of the Following Information is **Submitted**:		Check Off
Course Submitter:	Name of contact person and their certification numbers, organization, address, fax, phone	X
	Organization sponsoring or requesting the program (if any)	X
Course Title:	Name of course (related to content)	x
Purpose/Objective:	Describe purpose and how course will improve competency of certification(s) listed	x
Contact Hours:	Indicate instructional time and credit requested in hours (e.g.: 0.5 hr, 1 hr, 3.5 hrs)	x
Participants:	Check off each certification for which credit is requested (for which course relates to certification)	x
Content of Program:	Include collated agenda, time schedule, course outline; list specific sections of code, references, and topics covered	x
Course Materials:	Collated workbooks, handouts, hard copy or electronic versions of program is available	x
Instructor(s) Info.:	Resume of professional/educational qualifications & teaching/training experience/BBS certifications	x
Test Materials:		
Completed Application:		x

NOTE: The Board does NOT grant retroactive approval for courses presented prior to approval date.

Ohio Certificate Renewal
(614) 451-9003
Ohio Certificate Renewal
P.O. P.O. Box 211102
Columbus, Ohio 43221-1102
www.OhioCertificate.com

Voltage Drop Prevention

Outline Presented by Ohio Certificate Renewal

Course Hours: 4.0 Four 50-minute segments / Interactive Webinar or Classroom

Course Description: A course designed to address NEC requirements regarding Voltage Drop. Covered will be Feeders and Branch Circuits designed to minimize Voltage Drop beyond an acceptable level. This course will provide the class participant with methods for the prevention of Voltage Drop. Steps required to correct Voltage Drop will be discussed.

Course Objective: Enable the participant to gain an understanding of how to design feeders and branch circuits to minimize Voltage Drop.

I.	What is Voltage Drop	7:30 AM	50 Minutes
II.	Allowable Values		
III.	Applying Standard Calculations		50 Minutes
IV.	Determining the Level of Voltage Drop		
V.	Determine Amperage Allowances		50 Minutes
VI.	Determine Conductor Size/Type Requirements		
VII.	Determine Length allowances		50 Minutes
VIII.	Q & A	11:50 AM	

JD White

6048 Astor Avenue 614-546-7884
Columbus, OH 43232 jd.white2000@gmail.com

Objective:

To provide timely and informative teaching relative to Electrical Theory/Fundamentals, Electrical Practices, and National Electric Code Compliance. Most teaching is geared for licensed contractors, architects, engineers, electrical inspectors, and electrician apprentices. I also provide Electrical Design and Drafting of small to moderate sized projects, using AutoCAD.

Teaching Experience:

06/2007 - Present
Columbus State Community College
Title: Skilled Trades Apprenticeship Supervisor
Supervisor: Doug House, 614-287-2576

06/2007 - Present
Columbus State Community College
Title: Adjunct Faculty Teaching:
Electrical Courses, National Electric Code, Employability, Construction Overview, Construction Estimating, Manual Drafting, and AutoCAD
Supervisor: Doug House, 614-287-2576

09/1999 – Present
Electrician Apprenticeship Instructor
Title: Year 1 – Year 4 Lead Instructor
OCILB Instructor, as needed
IEC Central Ohio 614-473-1050

10/2001 – Present
OCILB Instructor, 1-2 seminars per year
Ohio Contractor Training 614-203-1531

12/2008 – Present
OCILB Instructor, 4 seminars per year
Rebecca Warren Training 614-402-6551

11/2017 – Present
OCILB Instructor, 2-6 seminars per year
HalfMoon Education Services 715-835-5900

06/2020 – Present
OCILB, BBS, 8 seminars per year
Ohio Certificate Renewal 614-451-9003

JD White

6048 Astor Avenue 614-546-7884
Columbus, OH 43232 jd.white2000@gmail.com

Trade & Other Experience:

01/2006 – Present
Voltaire Electric Company, Inc. – Columbus, OH
Electrical System Design and Drafting
Title: Consultant 614-546-7884

10/2005 - 08/2006
MG Abbott Electric Company – Columbus, OH
Title: Commercial Electrician, Estimator, and ITS Coordinator
Supervisor: Joe Abbott-President, 614-837-3614

07/1995 - 08/2005
Just Dandy Electric Systems, Inc. – Columbus, OH
Title: Owner, Electrician, Estimator, Project Designer...

08/1989 - 07/1995
Safeway Electric Company, Inc. – Columbus, OH
Title: Commercial Electrician, Commercial Division Manager
Supervisor: Andy Untch, 614-443-7672

07/1976 - 09/1982
MG Abbott Electric Company – Columbus, OH
Title: Electrician, Field Supervisor
Supervisor: Gene Abbott-Owner

09/1982 - 08/1989
Delphos Wesleyan Church – Delphos, OH
Mansfield Wesleyan Church – Mansfield, OH
Title: Senior Pastor

07/1972 - 06/1974
US Navy – Quonset Point-RI
Title: ADJ (Aviation Machinist Mate Jet)
Supervisor: Various

JD White

6048 Astor Avenue
Columbus, OH 43232

614-546-7884
jd.white2000@gmail.com

Licensure:

Electrical
11/1990
Cities of: Columbus, Elyria, Springfield, Youngstown, Toledo, Dayton, and others
07/1992

Electrical State of Ohio
02/1996
State of Ohio #EL 14058

Fire Alarm Installer
02/2003
State of Ohio #54.25.3708

Education:

06/2005 – 05/2015
Columbus State Community College – Columbus, OH
ATS Electrical System Architecture Designer

09/1982 - 05/1987
Indiana Wesleyan University – Marion, IN
Christian Ministries & Biblical Literature

06/1981 - 05/1982
Columbus Technical Institute – Columbus, OH
General Education Studies

06/1973
GED Central High School, Columbus, OH

07/1972 - 08/1973
Naval Aviation Technical Training Center
Aviation A School Jet Engines – Memphis, TN
Naval Aviation Technical Training Center
Aviation B School Helicopters – Quonset Pt, RI
Rating: Aviation Machinist Mate Jet

References:

Joe Abbott - Previous Employer: 614-837-3614
Barb Tipton – Present Employer: 614-473-1050
Dr. Andy Rezin – Previous Supervisor: 614-551-8378
Doug House – Present Supervisor: 614-287-2576
Other References Available Upon Request

Sam Cronk

Sam Cronk has extensive knowledge and experience with the interpretation and application of the National Electrical Code. Sam has been involved in all aspects of the residential, commercial, and industrial electrical industry since 1985. His previous employment includes work as an electrical foreman, project manager, and estimator. He has held numerous certifications and licenses including electrical journeyman by the State of South Carolina, journeyman wireman with the International Brotherhood of Electrical Workers (I.B.E.W.), and electrical contractor with the State of Ohio. Sam currently holds certifications as an Electrical Safety Inspector and Electrical Plans Examiner.

Sam has instructed a variety of adult education and professional continuing education classes, including with Columbus Public Schools, NECA-IBEW Joint Apprenticeship Training Committee (J.A.T.C.), International Association of Electrical Inspectors (I.A.E.I.), and the International Code Council (I.C.C.).

Robert J. Schutz, P.E.

Robert J. Schutz, P.E. is the retired Chief Building Official of the City of Powell (OH) and is currently a Consulting Engineer serving as the contract Plans Examiner and Inspector for several municipalities in central Ohio. He is a civil engineering graduate of the Ohio Northern University with post-graduate studies at the Ohio State University and the University of Southern California.

Bob is a registered Professional Engineer and Professional Surveyor in the State of Ohio; where is also certified as a Building Official, Plans Examiner, Mechanical Inspector, Plumbing Inspector and Electrical Safety Inspector. Bob previously served as the Chief Engineer with the State of Ohio Health Department where he supervised the Plumbing Inspection program, was the Chairman of the Plumbing Advisory Board and was a member of the Ohio Board of Building Standards. Bob instructs nationally and internationally for the International Code Council (ICC), as well as for OCR on Mechanical, Fuel Gas, Plumbing and Building codes.

VOLTAGE DROP - APPLICATIONS

WHAT IT IS?

WHAT ARE THE FACTORS?

WHAT ARE THE REMEDIES?

OCR

Ohio Certificate Renewal

"Since 1994"

WHAT IT IS

- Voltage Drop is the reality of a voltage you start with, is Not the voltage you deliver to a Load
- Voltage Drop is recognized by Code, and has a Max Design allowance of 5% total including Feeder and Branch Circuit
- NEC 210.19(A) Informational Note #4
  - 3% Branch Circuit and 2% Feeders total to not exceed 5%
- NEC 215.2(1)(B) Informational Note #2
  - 2% Branch Circuit and 3% Feeders total to not exceed 5%

WHAT IT IS

- 3-5% within a Feeder and/or 3-5% within a Branch Circuit
- Motor Manufacture build in 4% with a Max Allowance of 10%
  - 120V at 4% drop = 115V and at 10% drop is 108V
  - 240V at 4% drop = 230V and at 10% drop is 216V
  - 480V at 4% drop = 460V and at 10% drop is 432V
- Most appliances have a VD tolerance of 5-10%
- Any Voltage above their listing increases the efficiency and performance.
- Heating Appliances are rated at 100% Voltage, any reduction in Voltage will result in a decrease in Wattage/BTU

WHAT IT IS

1. Voltage Drop is revealed ONLY when connected to a load
   - Open Circuits will not have any Voltage Drop – “0”
     - Reason being conductors only resist the Flow of Electrons
       - Intensity, which is the force you are placing on Electron Flow.
     - Ohms Law is the relationship of Volts, Amps, & Resistance
     - Without a Circuit under Load there is only Voltage – Zero Amps
   - When you install a Feeder or a Branch Circuit to a remote panel or piece of equipment, and test for voltage, it will be the same as the origin, until the circuit is Loaded.
     - That is Turned On

WHAT IT IS

There are Three Parts (Factors) of Voltage Drop

1. Conductor Size/Construction
   - (#12 vs. #2) and (CU vs. AL)
2. Conductor Length from origin to destination
3. Ampacity of connected Load and or Loads

WHAT IT IS

1. Every conductor or conductive material has resistance
   - Granted, it is hard to look at a 500 or 750 kcmil as a resistor
   - Chapter 9, Table 8 shows Resistance per 1,000' for CU and AL
- Every Circuit, includes a Conductor, which has a Resistive Value
  - We will focus on the C Mills Size rather than CU vs. AL Values

Chapter 9, Table 8. Conductor Properties

Size	Area	Stranding		Overall		Direct-Current Resistance at 75ºC (167ºF) Copper		Aluminum
AWG	C Mills	Qty	Diam.'	Diam.'	Area(in.2)	Uncoated (ohm/1000 ft)	Coated	(ohm/1000 ft)
14	4,110	7	0.024	0.073	0.004	3.14	3.26	5.17
12	6,530	7	0.030	0.092	0.006	1.98	2.05	3.25
10	10,380	7	0.038	0.116	0.011	1.24	1.29	2.04
8	16,510	7	0.049	0.146	0.017	0.778	0.809	1.28
6	26,240	7	0.061	0.184	0.027	0.491	0.510	0.808

WHAT IT IS

- Since we will not focus on CU vs. AL using Resistance per 1,000ft.
  - As stated, the focus this presentation is going to be based on Conductor Size.
  - This, does not fail to recognize CU is a better Conductor than AL
- Therefore, we will use a Constant Value which is different for CU/AL
  - CU uses a constant of 12.9Ω
  - AL uses a constant of 21.2 Ω

WHAT IT IS

2. Conductor Length
   - As you increase the Conductor Length you will increase the Conductor Resistance
   - True Resistance tables are based on 1,000’
     - For Example, #2 CU is 0.194 Ohms per 1,000’
     - Which results in Every foot being 0.000194 Ohms
     - Not bad until you get to 200’ then it is 0.0388 Ohms
     - A 130Amp Load at 200’ will result in 10 VD 1Ph
     - A 130Amp Load at 400’ will result in 20 VD 1Ph

WHAT IT IS

3. Ampacity of a circuit is another Factor to consider
   - As you increase the ampacity of a load, the more a conductor will resist the flow of electrons
     - For Example, #2 CU is 0.194 Ohms per 1,000’
     - Every Amp Added will increase resistance
     - Previously A 130Amp Load at 400’ will result in 20 VD 1Ph
     - Whereas A 65Amp Load at 400’ will result in 10 VD 1Ph
     - In Open Air 190Amp Load at 400’ will result in 29.5 1 Ph

THE FACTORS

- The Factors are:
  1. Conductor Type/Size
  2. Conductor Length
  3. Ampacity or Circuit
- All three factors are a part of every circuit you will/have every install

THE FACTORS

- How these Factors are Used
- There are Two principal Methods of Volt Drop Calculation:
  - Ohmic Method - factors the Resistance per 1,000’ of Conductor
  - Circular Mill Method:
    - Factors a Constant of 12.9Ω CU or 21.2 Ω AL per C Mill
      - The Constant Divided by CM Equals resistance per foot
- This Presentation will focus on the Circular Mill Method for calculations

THE FACTORS

- The Percentage of Voltage Drop is also a Constant
  - Which results in a Greater the System Voltage,
    - The Greater the Amount of VD Allowed/Tolerated
- First: You need to determine the amount of VD Allowed based on the Voltage of the Electrical System
  - 120V @ 3% = 3.6VD @ 5% = 6VD
  - 208V @ 3% = 6.24VD @ 5% = 10.4VD
  - 240V @ 3% = 7.2VD @ 5% = 12VD
  - 480V @ 3% = 14.4VD @ 5% = 24VD

THE FACTORS

- There are four different Calculations using the CM Size Method

1. Standard Calculation for Determining VD of a Circuit
   - This is where you know the Amps/Type&Size/Length but NOT VD
   - $VD = 2xKxIxL/CM$ This is for Single Phase Circuits
   - $VD = 1.732xKxIxL/CM$ This is for Three Phase Circuits
   - This method is used when you want to determine the Value of VD
   - Note: 2 or 1.732 is a circuit multiplier for 1PH or 3PH

     K is the Constant of 12.9 CU, or 21.2 AL

     I is the Ampacity applied to a circuit

     L is the ***ONE-WAY*** length of a circuit

THE FACTORS

- Calculation Method #2 using the CM Size Method

2. Conductor Size Needed Calculation
   - Here you know the Amps/Length/VD but NOT Type&Size Needed
   - $CM = 2xKxIxL/VD$ This is for Single Phase Circuits
   - $CM = 1.732xKxIxL/VD$ This is for Three Phase Circuits
   - This method is used when you want to determine the CM of Conductors
   - This method is most common method of solving VD Issues

THE FACTORS

- Calculation Method #3 using the CM Size Method

3. Conductor Length Allowed
   - Here you know the Amps/Type&Size/VD but NOT Length Allowed
   - $L = CMxVD/(2xKxI)$ This is for Single Phase Circuits
   - $L = CMxVD/(1.732xKxI)$ This is for Three Phase Circuits
   - This method is used when you want to determine the Length of Conductors
   - Sometimes putting a piece of equipment say 150' rather than 250' can make a huge cost difference effecting size of pipe and wire.
   - This method is used about the 1/4 of the time for solving VD Issues

THE FACTORS

- There are four different Calculations using the CM Size Method

4. Circuit Amperage Allowed
   - Here you know the Type&Size/Length/VD but not Allowable Amps
   - $I = CMxVD/(2xKxL)$ This is for Single Phase Circuits
   - $I = CMxVD/(1.732xKxL)$ This is for Three Phase Circuits
   - This method is used when you want to determine the Ampacity of a Circuit
   - Sometimes reducing the ampacity of a circuit can make a huge cost difference effecting size of pipe and wire.
   - This method is used about the 1/6 of the time for solving VD Issues

THE FACTORS

1. Standard Calculation for Determining VD of a Circuit
   - This is where you know the Amps/Type&Size/Length but NOT VD
- Example you know you have a Feeder to a Sub-panel which according to a drawing is 425' from the MDP (counting up/down/left/right jogs). The Feeder is 200A, using a 250kcmil AL conductor, you know the maximum continued load will not exceed 160A per calculations (80% value of OCPD). Is this, OK?
- VD=1.732xKxIxL/CM Thus 1.732x21.2x160x425/250,000 = 9.99
- If this is a 208 @ 3% you are over, but @ 5% it is OK
  - But this will not allow for any VD in the Branch Circuits

THE FACTORS

2. Conductor Size Needed Calculation
   - Here you know the Amps/Length/VD but NOT Type&Size Needed
- Back to this 425' Feeder, if you want to keep it to 3%VD to allow for up to 2%VD in the sub-panels Branch Circuits; what size will this AL feeder need to be?
- Conductor Size Equation:
- CM=1.732xKxIxL/VD Thus 1.732x21.2x160x425/6.24 = 400136 CM
- 400 kcmil is required Proof 1.732x21.2x160x425/400,000 = 6.24 VD
  - This second Calculation is a Proof Calculation – Always Recommend

THE FACTORS

3. Conductor Length Allowed
   - Here you know the Amps/Type&Size/VD but NOT Length Allowed
   - So, you do not have 400 kcmil in the budget, you priced it based on 250 kcmil. So, at 160A and a 3% VD of 6.2 you need to know the maximum length of conductor able to be used?
   - Conductor Length Equation:
   - L = CMxVD/(2xKxI) Thus 250,000x6.24/(1.732x21.2x160) = 265'
   - 265' is the max Length Proof 1.732x21.2x160x265/250,000 = 6.23 VD Again, the Double Check insures your good.

THE FACTORS

4. Circuit Amperage Allowed
   - Here you know the Type&Size/Length/VD but not Allowable Amps
- So, the owner says I must have the panel where it is drawn, and you inform the customer, he really does not need 200A with a 160A capacity, what if you downsize the ampacity of the feeder to 125A?
- Conductor Ampacity Equation:
- I = CMxVD/(2xKxL) Thus 250,000x6.24/(1.732x21.2x425) = 100A
- 100A is the max Amps Proof 1.732x21.2x100x425/250,000 = 6.24 VD - So you install a 125A Feeder using 250 kcmil

THE REMEDIES

- Standard VD calculation to determine if an issue Exist
- Then determine, is this a type & Size Issue?
- Is the Conductor Length an Issue?
- Is the Circuit Ampacity too great for the circuit?

THE REMEDIES

- Is there too much ampacity?
  - Typically, this is tied to a piece of equipment or loads which cannot be reduced.
  - Are the loads Single phase, possibly feed with three phase
    - Single phase uses a multiplier of 2
    - Three phase uses a multiplier of 1.732
- If converting load from single to three phase is not an option, then reducing the load ampacity may not be an option.
  - Sometimes the customer can go with a lessor piece of equipment.
  - Or you might increase the Voltage 480V rather than 208V

THE REMEDIES

- Is there a Conductor Length an Issue?
  - Often relocating a load to a closer location to the source of power may be an option.
  - However, due to operations functionality, relocation to reduce a length of conductor may not be a viable option.

THE REMEDIES

- Then determine, is this a type&Size Issue?
- In most situation, using a different type or size of conductor is the only viable option to correct a VD issue.
- Increasing Size of Conductor
- Changing to Copper rather than using Aluminum

SOME EXAMPLES OF SITUATIONS

- Customer wants a 240V 1PH 30A circuit for 24A Equipment 150' from Service Panel. There is No Feeder, only the Branch Circuit.
  - Another contractor quoted #10 CU conductors (Sounds Far)
  - Do the Check:
    - 2x12.9x24x150/10,380 = 8.95 VD
    - Only 7.2VD is allowed for this circuit
    - Size Calculation shows a #8 CU will be required
    - 2x12.9x24x150/16,510 = 5.63VD
- Now you can better quote and inform the customer.

COMPOUND SITUATION

- Parking Lot Lights:

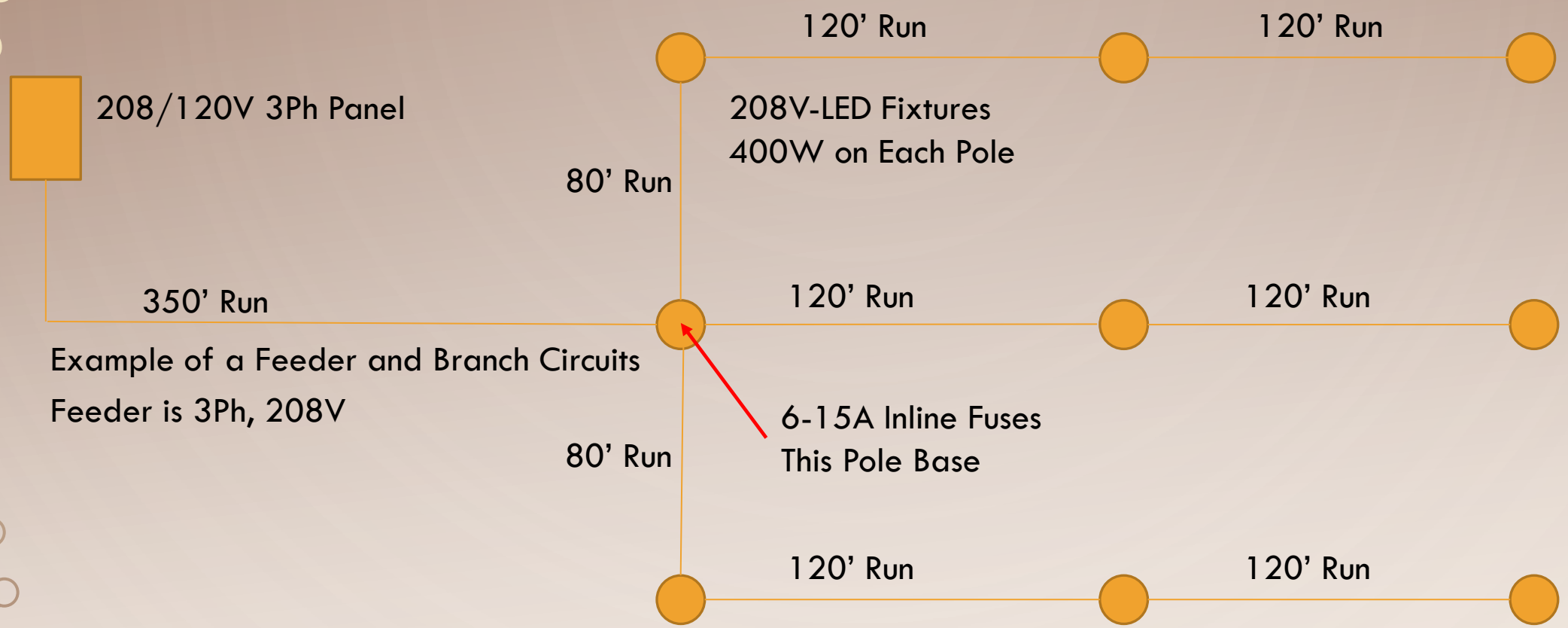

Example of a Feeder and Branch Circuits

Feeder is 3Ph, 208V

SOLUTION FEEDER

1. The OCPD will be 30A in Service Panel for Lighting Circuit
2. At Least a #8AL conductor would be required
   A. Load on each phase will be 11.54A
   B. I select to use 3% VD for the feeder, 2% VD for the Branches
   C. At 3%, the 208 VD allowed is 6.24 Volts
3. I'll use the Conductor Size Calculation to see if #8AL is OK
   - $1.732x21.2x11.54x350/6.24 = 23{,}767$ CM
   - #8 AL is only 16,510 Thus a #6 AL is required at 26,240 CM
   - $1.732x21.2x11.54x350/26{,}240 = 5.65$ VD Feeder is Good

COMPOUND SITUATION

- Parking Lot Lights:

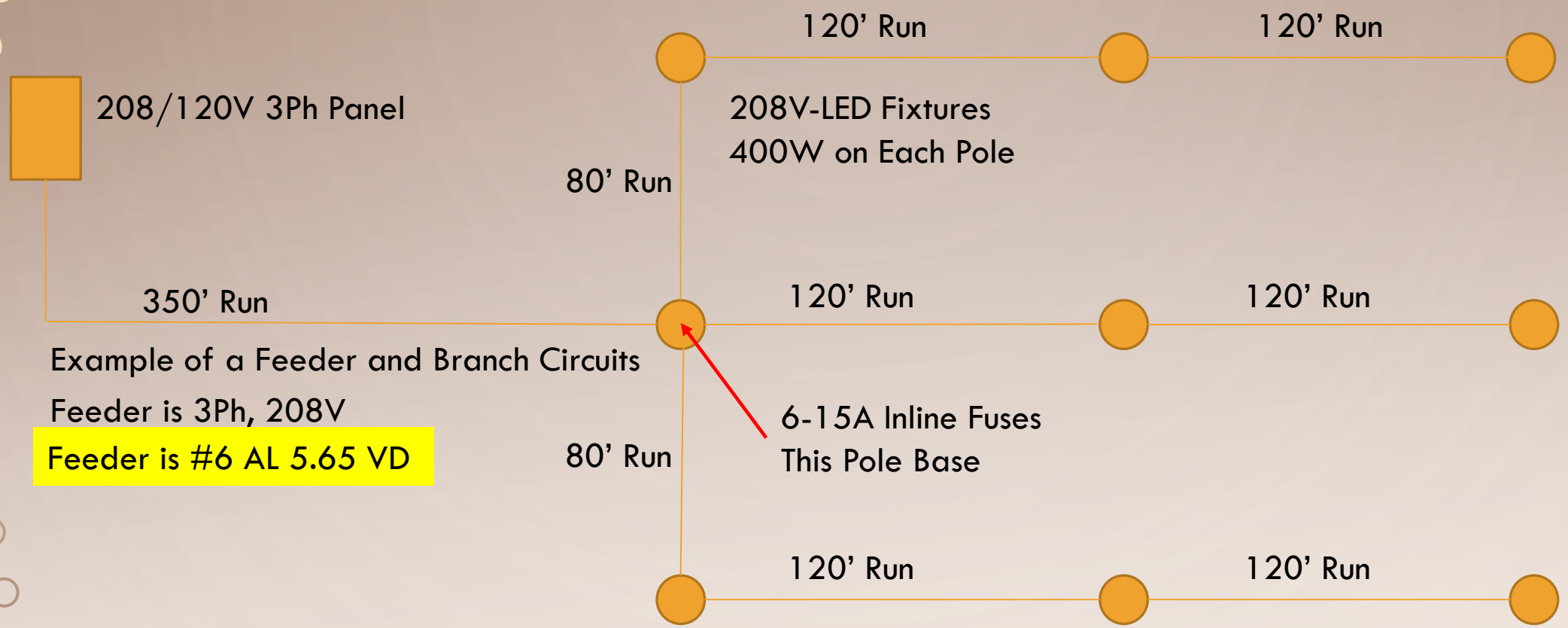

Example of a Feeder and Branch Circuits

Feeder is 3Ph, 208V

Feeder is #6 AL 5.65 VD

SOLUTION BRANCH

1. The OCPD will be 15A inline Fuses Central Pole
2. At Least a #10 AL conductor would be required for Branches
   A. Load on each phase of Branches will be 5.77A
   B. I use 2% VD for the Branches
   C. At 2%, the 208 VD allowed is 4.16 Volts
3. I'll use the Conductor Size Calculation to see if #10 AL is OK
   - $2x21.2x5.77x320/4.16 = 18{,}819$ CM
   - #10 AL is only 10,380 Thus a #6 AL is required at 26,240 CM
   - $2x21.2x5.77x320/26{,}240 = 2.98$ VD Branch is Good

COMPOUND SITUATION

- Parking Lot Lights:

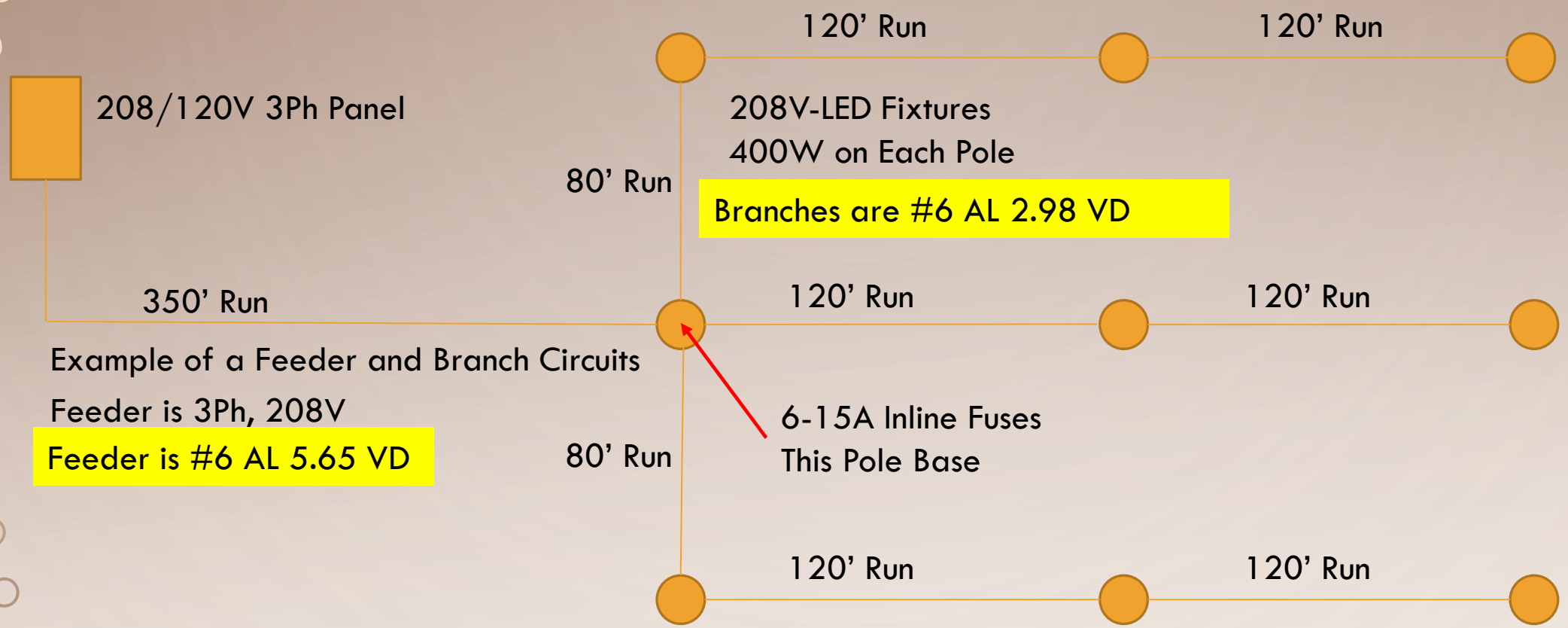

Example of a Feeder and Branch Circuits

Feeder is 3Ph, 208V

Feeder is #6 AL 5.65 VD

SOLUTION EACH POLE

1. The OCPD will be 15A inline Fuses Central Pole
2. At Least a #14 CU conductor required Each Pole Drop
   A. Load on each phase of Drops will be 1.92A
   B. I use 2.98 VD for the Branches
   C. This leaves 1.18 VD Allowed (2% of 208=4.16V - 2.98V Used)
3. I'll use the Volt Drop Calculation to see if #14 CU is OK
   - $2x12.9x1.92x25/4{,}110 = 0.30$ VD Pole Drops are Good

COMPOUND SITUATION

- Parking Lot Lights:

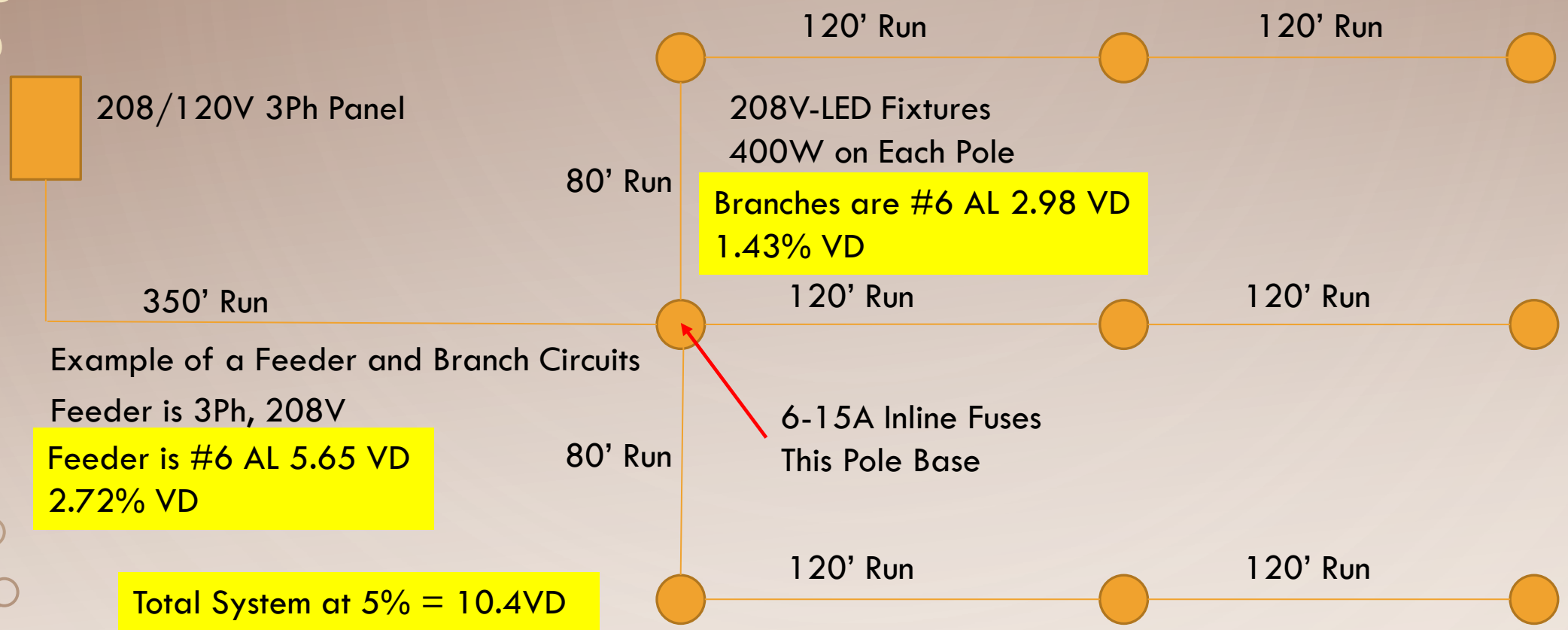

Example of a Feeder and Branch Circuits

Feeder is 3Ph, 208V

Feeder is #6 AL 5.65 VD
2.72% VD

Total System at 5% = 10.4VD
Used 8.93 VD or 4.29%

Pole Drops are 0.30 VD
0.14% VD

SOLUTION RACEWAY & EGC

1. Article 250.122(B)
   - By the Same portion Ungrounded conductors are increased due to Voltage Drop, the EGC shall also be increased by that Portion
   - However, in now way shall the EGC be required to be larger than the largest ungrounded phase conductor.
   - Therefore, the EGC will need be #6 AL
   - The Raceway Minimum of 1” PVC, but 1-1/4” Due to Run is Better
   - Raceways to other poles could be a 1” PVC

FREE RESOURCE

K Method VOLTAGE DROP FORMULAS

The NEC recommend a maximum of 3% voltage drop for either a Feeder or a Branch with not more than 2% additional for the other. Thus no circuit should have more than 5% total Voltage Drop.

Single-Phase:

$$VD = \frac{2 \times K \times I \times L}{CM}$$

Three-Phase:

$$VD = \frac{1.732 \times K \times I \times L}{CM}$$

VD = Volts dropped within the circuit
K = 12.9 Ohms for Copper, and 21.2 Ohms for Aluminum, (based on an operating temperature of 75C)
I = Amps, based on 100% of Actual load
L = Length in Feet, one way distance
CM = Circular-Mills, of Conductor wire size, based on Chapter 9 Table 8 NEC
2 = Single Phase Value of a Complete Single Phase Circuit
1.7 = Three Phase Value of a Complete Three Phase Circuit

CONDUCTOR SIZE / VOLTAGE DROP

Increase the size of the conductor to decrease the Voltage drop of a Circuit (Reduces Resistance)

Single-Phase:

$$CM = \frac{2 \times K \times I \times L}{VD}$$

Three-Phase:

$$CM = \frac{1.732 \times K \times I \times L}{VD}$$

CONDUCTOR LENGTH / Circuit x K x I

Reduce the Length of the conductor to decrease the Voltage drop of a Circuit (Reduces Resistance)

Single-Phase:

$$L = \frac{CM \times VD}{(2 \times K \times I)}$$

Three-Phase:

$$L = \frac{CM \times VD}{(1.732 \times K \times I)}$$

CONDUCTOR AMPERAGE / Circuit x K x L

Reduce the Amps placed on a conductor to decrease the Voltage drop of a Circuit (Reduces Amps)

Single-Phase:

$$I = \frac{CM \times VD}{(2 \times K \times L)}$$

Three-Phase:

$$I = \frac{CM \times VD}{(1.732 \times K \times L)}$$

- Email JD White at: jd.white2000@gmail.com
- Free Single Sheet PDF
- This has all four VD Calculation with Single and Three Phase Notes

Simply request the VD Sheet

QUESTIONS?

Email JD White at:

jd.white2000@gmail.com

THANKS FOR ATTENDING